# REQUEST FOR LETTER OF MAP REVISION
# NE CANON DRAINAGE BASIN (SUB-BASIN FROM NE)
# ORCHARD AVENUE DETENTION BASIN
# CANON CITY, COLORADO

Prepared for:
The City of Canon City
612 Royal Gorge Blvd.
Canon City, CO 81215-1460

Prepared by:
Associated Design Professionals, Inc.
1861 Austin Bluffs Parkway, Suite 101
Colorado Springs, CO 80918

May 6, 1998
File: 970806

ADP
Associated Design Professionals, Inc.

ADP
Associated Design Professionals, Inc.

May 6, 1998

Michael J. Baker Jr., Inc.
3601 Eisenhower Avenue, Suite 600
Alexandria, VA 22304

**RE: NE Canon Drainage Area (Sub-Basin from NE)**
**Letter of Map Revision – Orchard Avenue Detention Basin**

To Whom It May Concern:

Please find enclosed two (2) copies of the supporting documentation for the Request for Letter of Map Revision (LOMR) for the area between High Street and Central Avenue within the sub-basin from the NE . Also enclosed is a diskette with HEC-RAS input and output for the project area.

The LOMR submittal is divided into the following sections:

SECTION 1 – Application/Certification Forms
SECTION 2 – TR20 Run - Hydrologic Analysis
SECTION 3 – HEC-RAS Run – Pre Detention Conditions
SECTION 4 – HEC-RAS Run – As Built Conditions
SECTION 5 – As Built Profiles
Back Pocket – Revised Floodplain Maps
Attached plan set

The original FEMA floodplain delineation within this reach was approximate. Therefore, an evaluation of the existing FEMA floodplain was performed utilizing current topographic mapping. Since a regional detention facility was recently constructed by the City of Canon City and will be maintained by them, the FEMA floodplain delineation was modified to reflect the revised downstream flows.

The examination of current topography, combined with revised HEC-RAS runs for the 100-year storm, indicated that the 100-year floodplain is contained within the detention facility, and the defined natural channel.

Please contact me immediately if you have any questions, or need additional information.

Sincerely.

Michael A. Bartusek, P.E.
Principal

Enclosures
MAB/bae
970806_lt1.398

1861 Austin Bluffs Parkway, Suite 101 • Colorado Springs, CO 80918 • Phone 719/266-5212 • Fax 719/266-5341

# SECTION 1

## Application/Certification Forms

FEDERAL EMERGENCY MANAGEMENT AGENCY
**REVISION REQUESTOR AND COMMUNITY OFFICIAL FORM**

O.M.B. Burden No. 3067-0148
Expires July 31, 1997

FEMA USE ONLY

**PUBLIC BURDEN DISCLOSURE NOTICE**

Public reporting burden for this form is estimated to average 2.13 hours per response. The burden estimate includes the time for reviewing instructions, searching existing data sources, gathering and maintaining the needed data, and completing and reviewing the form. Send comments regarding the accuracy of the burden estimate and any suggestions for reducing this burden, to: Information Collections Management, Federal Emergency Management Agency, 500 C Street, S.W., Washington, DC 20472; and to the Office of Management and Budget, Paperwork Reduction Project (3067-0148), Washington, DC 20503.

**1. OVERVIEW**

1. The basis for this revision request is (are): *(check all that apply)*
   - [X] Physical change
     - [X] Existing
     - [ ] Proposed
   - [ ] Improved methodology
   - [X] Improved data
   - [ ] Floodway revision
   - [ ] Other _____

   Explain _____

2. Flooding Source: NE CANON DRAINAGE AREA (SUB-BASIN FROM NE)
3. Project Name/Identifier: ORCHARD AVENUE LETTER OF MAP REVISION
4. FEMA zone designations affected: A, X
   (example: A, AH, AO, A1-A30, A99, AE, V, V1-30, VE, B, C, D, X)
5. The NFIP map panel(s) affected for all impacted communities is (are):

| Community No. | Community Name | County | State | Map No. | Panel No. | Effective Date |
|---|---|---|---|---|---|---|
| EX: 480301 | Katy,City | Harris, Fort Bend | TX | 480301 | 0005D | 02/08/83 |
| 480287 | Harris County | Harris | TX | 48201C | 0220G | 09/28/90 |
| 080067 | CAÑON CITY | FREMONT | CO | 080067 | 0335B | 09/29/89 |
| | | | | | | |
| | | | | | | |
| | | | | | | |

6. The area of revision encompasses the following types of flooding, structures, and associated disciplines: *(check all that apply)*

| Types of Flooding | Structures | Disciplines* |
|---|---|---|
| [X] Riverine | [ ] Channelization | [X] Water Resources |
| [ ] Coastal | [ ] Levee/Floodwall | [ ] Hydrology |
| [ ] Alluvial Fan | [X] Bridge/Culvert | [X] Hydraulics |
| [ ] Shallow Flooding *(e.g. Zones AO and AH)* | [ ] Dam | [ ] Sediment Transport |
| [ ] Lakes | [ ] Coastal | [ ] Interior Drainage |
| | [ ] Fill | [ ] Structural |
| Affected by wind/wave action | [ ] Pump Station | [ ] Geotechnical |
| [ ] Yes | [ ] None | [ ] Land Surveying |
| [ ] No | [ ] Channel Relocation | [ ] Other *(describe)* |
| | [ ] Excavation | |
| | [ ] Other *(describe)* | |

[ ] Other(describe) _____ _____ _____

* Attach completed "Certification by Registered Professional Engineer and/or Land Surveyor" Form for each discipline checked. (Form 2)

**2. FLOODWAY INFORMATION**

7. Does the affected flooding source have a floodway designated on the effective FIRM or FBFM? [ ] Yes [X] No
8. Does the revised floodway delineation differ from that shown on the effective FIRM or FBFM [X] Yes [ ] No

   If yes, give reason: PREVIOUS FLOODWAY DELINEATION WAS APPROXIMATE

Attach copy of either a public notice distributed by the community stating the community's intent to revise the floodway or a statement by the community that it has notified all affected property owners and affected adjacent jurisdictions.

9. Does the State have jurisdiction over the floodway or its adoption by communities participating in the NFIP? ☐ Yes ☒ No

If yes, attach a copy of a letter notifying the appropriate State agency of the floodway revision and documentation of the approval of the revised floodway by the appropriate State agency.

### 3. PROPOSED ENCROACHMENTS

10. With floodways:

1A. Does the revision request involve fill, new construction, substantial improvement, or other development in the floodway? ☒ Yes ☐ No

1B. If yes, does the development cause the 100-year water surface elevation to increase at any location by more than 0.000 feet? ☐ Yes ☒ No

11. Without floodways:

2A. Does the revision request involve fill, new construction, substantial improvement, or other development in the 100-year floodplain? ☐ Yes ☐ No

2B. If yes, does the cumulative effect of all development that has occurred since the effective SFHA was originally identified cause the 100-year water surface elevation to increase at any location by more than one foot (*or other surcharge limit if community or state has adopted more stringent criteria)*? ☐ Yes ☐ No

If the answer to either Items 1B or 2B is yes, please provide documentation that all requirements of Section 65.12 of the NFIP regulations have been met, regarding evaluation of alternatives, notice to individual legal property owners, concurrence of CEO, and certification that no insurable structures are impacted.

### 4. REVISION REQUESTOR ACKNOWLEDGMENT

12. Having read NFIP Regulations, 44 CFR Ch. I, parts 59, 60, 61, and 72, I believe that the proposed revision ☒ is ☐ is not in compliance with the requirements of the aforementioned NFIP Regulations.

### 5. COMMUNITY OFFICIAL ACKNOWLEDGMENT

13. Was this revision request reviewed by the community for compliance with the community's adopted floodplain management ordinances? ☒ Yes ☐ No

14. Does this revision request have the endorsement of the community? ☒ Yes ☐ No

If no to either of the above questions, please explain: _____

Please note that community acknowledgment and /or notification is required for all requests as outlined in Section 65.4 (b) of the NFIP Regulations.

### 6. OPERATION AND MAINTENANCE

15. Does the physical change involve a flood control structure (e.g., levees, floodwalls, channelization, basins, dams)? ☒ Yes ☐ No

If yes, please provide the following information for each of the new flood control structures:

A. Inspection of the flood control project will be conducted periodically by City of Canon City (entity) _____ with a maximum interval of 3 months between inspections.

B. Based on the results of scheduled periodic inspections, appropriate maintenance of the flood control facilities will be conducted by City of Canon City (entity) to ensure the integrity and degree of flood protection of the structure.

C. A formal plan of operation, including documentation of the flood warning system, specific actions and assignments of responsibility by individual name or title, and provisions for testing the plan at intervals not less than one year, ☒ has ☐ has not been prepared for the flood control structure.

D. The community is willing to assume responsibility for ☐ performing ☐ overseeing compliance with the maintenance and operation plans of the ORCHARD AVENUE DETENTION FACILITY (Name)

flood control structure. If not performed promptly by an owner other than the community, the community will provide the necessary services without cost to the Federal government.

Attach operation and maintenance plans

**7. REQUESTED RESPONSE FROM FEMA**

16. After examining the pertinent NFIP regulations and reviewing the document entitled "Appeals, Revisions, and Amendments to Flood Insurance Maps: A guide for Community Officials," dated January 1990, this request is for a:

| | | |
|---|---|---|
| _____a. | CLOMR | A letter from FEMA commenting on whether a proposed project, if built as proposed, would justify a map revision *(LOMR or PMR)*, or proposed hydrology changes *(see 44 CFR Ch. I, Parts 60, 65, and 72).* |
| X b. | LOMR | A letter from FEMA officially revising the current NFIP map to show changes to floodplains, floodways, or flood elevations. LOMRs typically depict decreased flood hazards. *(See 44 CFR Ch. I Parts 60 and 65.)* |
| _____c. | PMR | A reprinted NFIP map incorporating changes to floodplains, floodways, or flood elevations. Because of the time and cost involved to change, reprint, and redistribute an NFIP map, a PMR is usually processed when a revision reflects increased flood hazards or large-scope changes. *(See 44 CFR Ch. I, Parts 60 and 65.)* |
| _____d. | Other: | Describe_____ |

**8. FORMS INCLUDED**

17. Form 2 entitled, "Certification By Registered Professional Engineer and/or Land Surveyor" must be submitted.

The following forms should be included with this request if (check the included forms):

| | |
|---|---|
| • Hydrologic analysis for flooding source differs from that used to develop FIRM | ☒ Hydrologic Analysis Form (Form 3) |
| • Hydraulic analysis for riverine flooding differs from that used to develop FIRM | ☒ Riverine Hydraulic Analysis Form (Form 4) |
| • The request is based on updated topographic information or a revised floodplain or floodway delineation is requested | ☒ Riverine /Coastal Mapping Form (Form 5) |
| • The request involves any type of channel modification | ☒ Channelization Form (Form 6) |
| • The request involves new bridge or culvert or revised analysis of an existing bridge or culvert | ☒ Bridge/Culvert Form (Form 7) |
| • The request involves a new revised levee/floodwall system | ☒ Levee/Floodwall System Analysis Form (Form 8) |
| • The request involves analysis of coastal flooding | ☐ Coastal Analysis Form (Form 9) |
| • The request involves coastal structures credited as providing protection from the 100-year flood | ☐ Coastal Structures (Form 10) |
| • The request involves an existing, proposed, or modified dam | ☒ Dam Form (Form 11) |
| • The request involves structures credited as providing protection from the 100-year flood on an alluvial fan | ☐ Alluvial Fan Flooding Form (Form 12) |

## 9. INITIAL REVIEW FEE

18. The minimum initial review fee for the appropriate request category has been included. ☐ Yes ☐ No

Initial fee amount: $ 4300

Check or money order only. Make check or money order payable to : **National Flood Insurance Program.** If paying by Visa or Mastercard please refer to the credit card information form which follows this form.

or

19. This request is for a project that is for public benefit and is primarily intended for flood loss reduction to insurable structures in identified flood hazard areas which were in existence prior to the commencement of construction of the flood control project. ☒ Yes ☐ No

or

20. This request is to correct map errors, to include the effects of natural changes within the areas of special flood hazard, or solely to provide more detailed data. ☒ Yes ☐ No

**Note:** I understand that my signature indicates that all information submitted in support of this request is correct.

Signature of Revision Requester

MICHAEL A BARTUSEK - PROJECT MANAGER
Printed Name and Title of Revision Requester

ASSOCIATED DESIGN PROFESSIONALS INC
Company Name

(719) 266-5212 5/6/96
Telephone No. Date

**Note:** Signature indicates that the community understands, from the revision requester, the impacts of the revision on flooding conditions in the community.

Signature of Community Official

ROBERT W. SAULMON - CITY ENGINEER
Printed Name and Title of Community Official

CITY OF CANON CITY
Community Name

Date

Does this request impact any other communities? ☐ Yes ☒ No

If yes, attach letters from all affected jurisdictions acknowledging revision request and approving changes to floodway, if applicable.

**Note:** Although a photograph of physical changes is not required, it may be helpful for FEMA's review.

FEDERAL EMERGENCY MANAGEMENT AGENCY

**CERTIFICATION BY REGISTERED PROFESSIONAL ENGINEER AND/OR LAND SURVEYOR FORM**

O.M.B. Burden No. 3067-0148
Expires July 31, 1997

## PUBLIC BURDEN DISCLOSURE NOTICE

Public reporting burden for this form is estimated to average . 23 hour per response. The burden estimate includes the time for reviewing instructions, searching existing data sources, gathering and maintaining the needed data, and completing and reviewing the form. Send comments regarding the accuracy of the burden estimate and any suggestions for reducing this burden, to: Information Collections Management, Federal Emergency Management Agency, 500 C Street, S.W., Washington, DC 20472; and to the Office of Management and Budget, Paperwork Reduction Project (3067- 0148), Washington, DC 20503.

1. This certification is in accordance with 44 CFR Ch. I, Section 65.2
2. I am licensed with an expertise in HYDRAULICS
   [example: water resources *(hydrology, hydraulics, sediment transport, interior drainage)** structural, geotechnical, land surveying.]
3. I have 24 years experience in the expertise listed above.
4. I have ☒ prepared ☐ reviewed the attached supporting data and analyses related to my expertise.
5. I ☒ have ☐ have not visited and physically viewed the project.
6. In my opinion, the following analyses and /or designs, is/are being certified:
   REVISED HYDRAULIC ANALYSIS OF NE CANON DRAINAGE AREA SUB-BASIN FROM NE
7. Base upon the following review, the modifications in place have been constructed in general accordance with plans and specifications.

   Basis for above statement: (check all that apply)
   - a. ☒ Viewed all phases of actual construction.
   - b. ☒ Compared plans and specifications with as-built survey information.
   - c. ☒ Examined plans and specifications and compared with completed projects.
   - d. ☐ Other _____
8. All information submitted in support of this request is correct to the best of my knowledge. I understand that any false statement may be punishable by fine or imprisonment under Title 18 of the United States Code, Section 1001.

Name: MICHAEL A. BARTUSEK
(please print or type)

Title: PRESIDENT, ASSOCIATED DESIGN PROFESSIONALS, INC.
(please print or type)

Registration No. 23329 Expiration Date: 5/31/99

State COLORADO

Type of License PROFESSIONAL ENGINEER

_____
Signature

_____
Date

_____
Seal
*(Optional)*

*Specify Subdiscipline

Note: Insert not applicable (N/A) when statement does not apply.

| FEDERAL EMERGENCY MANAGEMENT AGENCY<br>**HYDROLOGIC ANALYSIS FORM** | *O.M.B. Burden No. 3067-0148*<br>*Expires July 31, 1997* | *FEMA USE ONLY* |
|---|---|---|

## PUBLIC BURDEN DISCLOSURE NOTICE

Public reporting burden for this form is estimated to average 3.67 hours per response. The burden estimate includes the time for reviewing instructions, searching existing data sources, gathering and maintaining the needed data, and completing and reviewing the form. Send comments regarding the accuracy of the burden estimate and any suggestions for reducing this burden, to: Information Collections Management, Federal Emergency Management Agency, 500 C Street, S.W., Washington, DC 20472; and to the Office of Management and Budget, Paperwork Reduction Project (3067-0148), Washington, DC 20503.

Community Name: CANON CITY, COLORADO

Flooding Source: NE CANON DRAINAGE AREA (SUB-BASIN FROM NE)
*(One form for each flooding source)*

Project Name /Identifier: ORCHARD AVENUE LETTER OF MAP REVISION

### 1. HYDROLOGIC ANALYSIS IN FIS

- [x] Approximate study stream (Zone A)
- [ ] Detailed study stream (briefly explain methodology)_____

### 2. REASON FOR NEW HYDROLOGIC ANALYSIS

- [x] No existing analysis
- [x] Improved data *(see data revision on page 3)*
- [x] Changed physical conditions of watershed *(explain)* REGIONAL DETENTION FACILITY HAS REDUCED DOWNSTREAM FLOWS
- [x] Alternative methodology *(justify why the revised model is better than model used in the effective FIS)* PREVIOUS FLOODWAY DELINEATION WAS APPROXIMATE
- [ ] Evaluation of proposed conditions (CLOMRs only) (explain)_____
- [ ] Other_____

If a computer program/model was used in revising the hydrologic analysis, please provide a diskette with the input files for the 10-, 50-, 100 - and 500-year recurrence intervals.

Only the 100-year recurrence interval need be included for SFHAs designated as Zone A.

### 3. APPROVAL OF ANALYSIS

- [ ] Approval of hydrologic analysis, including the resulting peak discharge value (s) has been provided by the appropriate local, state, or Federal Agency. (i.e.,_____)
  Attach evidence of approval.
- [x] Approval of the hydrologic analysis is not required by any local, State, or Federal Agency.

Stream: NE CANON DRAINAGE AREA (SUB-BASIN FROM NE)

Comparison of 100-year Discharges

| Location: | Drainage area (Sq mi.) | FIS (cfs): | Revised (cfs): |
|---|---|---|---|
| NORTH OF HIGH ST. | 1.01 | 926 | 926 |
| | | | |
| | | | |
| | | | |
| | | | |

Note: When revised discharges are not significantly different than FIS discharges, FEMA may require a confidence limits analysis on attachment D at a later date to complete the review.

As is often the case with revision requests, only a portion of a stream may actually be revised or be affected by a revision. Therefore, transition to the unrevised portion is important to maintain the continuity of the study. NFIP regulations stipulate that such a transition must be assured. What is the transition from the proposed discharges to the effective discharges? Please explain how the transition was made *(attach separate sheet if necessary)*

100 YR. FLOW OF 926 cfs IS REDUCED TO 160 cfs BY MEANS OF A 37 Ac·Ft DETENTION FACILITY

ATTACH A COMPLETED REVIEW OF RESULTS PAGE FOR EACH FLOODING SOURCE.

Is the new hydrologic analysis being developed solely to revise the flow values presented in the FIS *(i.e. no changed hydraulic conditions)*? ☐ Yes ☒ No

If yes, does the 100-year water surface elevation change by 1.0 foot or more? ☒ Yes ☐ No

FEMA does not normally revise NFIP maps solely due to insignificant flow changes where changes in 100-year water surface elevation are less than 1.0 foot.

## 5. HISTORICAL FLOODING INFORMATION

Is historical data available for the flooding source? ☐ Yes ☒ No

If yes, provide the following:

Location along flooding source: _____

Maximum peak discharge: _____ cfs

Second highest peak discharge: _____ cfs

Source of information: _____

## 6. GAGE RECORD INFORMATION

Location of nearest gage to project site *(along flooding source or similar watershed; specify)*

NONE

Gaging Station: _____

Drainage area at gage: _____ $mi^2$

Number of years of data: _____

## 7. DATA REVISION

Please use the following table to list all the data and/or parameters affected by this request and identify them as new data (*New*) or as revising existing data (*Revised*). *(If necessary, attach a separate sheet.)*

| Data Parameter | New | Revised | Data Source |
|---|---|---|---|
| 50-YEAR DISCHARGE | ☒ | ☐ | TR20 RUNOFF MODEL |
| 10-YEAR DISCHARGE | ☒ | ☐ | TR20 RUNOFF MODEL |
| | ☐ | ☐ | |
| | ☐ | ☐ | |
| | ☐ | ☐ | |

- Data source can be from a Federal, State, or local government agency, or from a private source. Some State and local governments may have less strict data requirements than Federal agencies, in which case the hydrologic data may not be accepted by FEMA unless it is demonstrated that the data give a better estimate of the flood discharge.
- Attach documentation corroborating each data source *(i.e., certified statement, report, bibliographical reference to a published document)*. In the case of a published document or a government report, providing copies of the cover and pertinent pages may be helpful.

## 8. METHODOLOGY FOR NEW ANALYSIS

☐ Statistical Analysis of Gage Records (*use Attachment A*)

☐ Regional Regression Equations *(use Attachment B)*

☒ Precipitation/Runoff Model *(use Attachment C)*

☐ Other *(specify; attach backup computations and supporting data)* _____

## ATTACHMENT A: STATISTICAL ANALYSIS OF GAGE RECORDS

Gaging Station: N/A

Gage Location (latitude and longitude): _____

| | FIS: | Revised: |
|---|---|---|
| 1. Number of years of data | _____ | _____ |
| Systematic | _____ | _____ |
| Historical | _____ | _____ |
| 2. Homogeneous data | ☐ Yes ☐ No | ☐ Yes ☐ No |
| 3. Data adjustments | ☐ Yes ☐ No | ☐ Yes ☐ No |
| 4. Number of high outliers | _____ | _____ |
| Low outliers | _____ | _____ |
| Zero events | _____ | _____ |
| 5. Generalized skew | _____ | _____ |
| 6. Station skew | _____ | _____ |
| 7. Adopted skew | _____ | _____ |
| 8. Probability distribution used (justify if log-Pearson III was not used) | _____ | _____ |
| 9. Transfer equations to ungaged sites | | ☐ Yes ☐ No |

If yes, specify method

_____

_____

_____

10. Expected probability* ☐ Yes ☐ No

11. Comparison of results with other analyses ☐ Yes ☐ No

If yes, describe comparison

_____

_____

_____

*FEMA does not accept expected probability analyses for the purpose of reflecting flood hazard information in a FIS.

If any data is not available, indicate by N/A.

Attach analysis including plot of flood frequency curve.

1. Bibliographical Reference:
N/A

*(Attach a copy of title page, table of contents, and pertinent pages including equations.)*

2. Gaged or ungaged stream: _____

3. Hydrologic region(s): _____
Attach backup map.

4. Provide parameters, values, and source of data used to define parameters.

| | | FIS: | | Revised: | |
|---|---|---|---|---|---|
| 5. | Urbanized conditions calculations ..... | ☐ Yes | ☐ No | ☐ Yes | ☐ No |
| 6 | Percent of watershed urbanization ..... | _____ | | _____ | |
| 7. | Is the watershed controlled? ..... | ☐ Yes | ☐ No | ☐ Yes | ☐ No |
| 8. | Comparison with other analyses ..... | ☐ Yes | ☐ No | ☐ Yes | ☐ No |

If the answer to 5, 7, or 8 is yes, explain methodology in Comments.

If data is not available, indicate by N/A.

Comments

Attach computation and supporting maps, delineating the watershed boundary and drainage area divides.

| | | FIS: | Revised |
|---|---|---|---|
| 1. | Method or model used: | | TR20 |
| | Version: | | .2 |
| | Date: | | 9/83 |
| 2. | Source of rainfall depth: | | NOAA 2, VOL III |
| 3. | Source of rainfall distribution: | | NOAA 2, VOL III |
| 4. | Rainfall duration: | | 24 HR |
| 5. | Areal adjustment to precipitation (%): | | 0% |
| 6. | Maximum overland flow length | | 500 FT |
| 7. | Hydrograph development method: | | UNIT HYDROGRAPH |
| 8. | Loss rate method: | | AMC II |
| | Source of soils information: | | SCS |
| | Source of land use information | | FREMONT CO. |
| 9. | Channel routing method: | | MOD. ATT-KIN |
| 10. | Reservoir routing: | ☐ Yes ☐ No | ☒ Yes ☐ No |
| 11. | Baseflow considerations: | ☐ Yes ☐ No | ☐ Yes ☒ No |

If yes, explain how baseflow was determined:

| | | |
|---|---|---|
| 12. | Snowmelt considerations: | ☐ Yes ☐ No ☐ Yes ☒ No |
| 13. | Model calibration: | ☐ Yes ☐ No ☐ Yes ☒ No |

If yes, explain how calibration was performed

| | | |
|---|---|---|
| 14. | Future land use condition: | ☐ Yes ☒ No |

If yes, explain why

**NOTE:** FEMA policy is to base flooding on existing conditions.
If data is not available, indicate by N/A.

Attach precipitation/runoff model, hydrologic model schematic, curve number calculations, time of concentration calculations, and supporting maps, delineating the watershed boundary and drainage area divides.

Stream: NE CANON DRAINAGE AREA (SUB-BASIN FROM NE)

Select one location for Confidence Limits Evaluation (*describe location*): FLOW SOUTH OF HIGH ST.

Discharges for selected location:

| Exceedance Probability | | FIS | Revised |
|---|---|---|---|
| 10% | (10-year) ..... | — cfs | 408 cfs |
| 2% | (50-year) ..... | — cfs | 741 cfs |
| 1% | (100-year) ..... | 926 cfs | 926 cfs |
| 0.2% | (500-year) ..... | — cfs | — cfs |

1% (100-year) Flood Confidence Intervals

90% Confidence Interval: 5% limit _____ cfs

95% limit _____ cfs

50% Confidence Interval: 25% limit _____ cfs

75% limit _____ cfs

If the value of the 100-year frequency flood in the FIS is beyond the 50% confidence interval but within the 90% confidence interval, does the 100-year water surface elevation change by 1.0 foot or more? ☐ Yes ☐ No

An example of confidence limits analysis can be found in Appendix 9 of Bulletin 17B.

Attach Confidence Limits Analysis.

| FEDERAL EMERGENCY MANAGEMENT AGENCY<br>RIVERINE HYDRAULIC ANALYSIS FORM | O.M.B. Burden No. 3067-0148<br>Expires July 31, 1997 | FEMA USE ONLY |
|---|---|---|

## PUBLIC BURDEN DISCLOSURE NOTICE

Public reporting burden for this form is estimated to average 2.25 hours per response. The burden estimate includes the time for reviewing instructions, searching existing data sources, gathering and maintaining the needed data, and completing and reviewing the form. Send comments regarding the accuracy of the burden estimate and any suggestions for reducing this burden, to: Information Collections Management, Federal Emergency Management Agency, 500 C Street, S.W., Washington, DC 20472; and to the Office of Management and Budget, Paperwork Reduction Project (3067-0148), Washington, DC 20503.

Community Name: CANON CITY

Flooding Source: NE DRAINAGE AREA (SUB-BASIN FROM NE)
*(One form for each flooding source)*

Project Name/Identifier: ORCHARD AVENUE LETTER OF MAP REVISION

### 1. REACH TO BE REVISED

Downstream limit: 30 ft DOWNSTREAM OF SOUTH STREET

Upstream limit: 2000 ft UPSTREAM OF SOUTH STREET

### 2. EFFECTIVE FIS

☒ Not studied

☒ Studied by approximate methods

Downstream limit of study: 700 FT NORTH OF CENTRAL ST.

Upstream limit of study: HIGH STREET

☐ Studied by detailed methods

Downstream limit of study: _____

Upstream limit of study: _____

☐ Floodway delineated

Downstream limit of Floodway: _____

Upstream limit of Floodway: _____

### 3. HYDRAULIC ANALYSIS

Why is the hydraulic analysis different from that used to develop the FIRM. *(Check all that apply)*

☐ Not studied in FIS

☐ Improved hydrologic data/analysis. Explain: _____

☒ Improved hydraulic analysis. Explain: EXISTING CHANNEL ELEVATIONS DO NO NOT MATCH FEMA ELEVATIONS. ANALYSIS RERUN WITH MORE ACCURATE MAPPING. ORIGINAL STUDY WAS APPROXIMATE ONLY

☐ Flood control structure. Explain: _____

☐ Other. Explain: _____

**For areas which have detailed flooding:**

Full input and output listings along with files on diskette (if available) for each of the models listed below (items 1, 2, 3, 4, and 5) and summary of the source of input parameters used in the models must be provided. The summary must include a complete description of any changes made from model to model (e.g. duplicate effective model to corrected effective model) At a minimum, the Duplicate Effective (item 1) and the Revised or Post-Project Conditions (item 4) models must be submitted. See instructions for directions on when other models may be required.

**For areas which do not have detailed flooding:**

Only the 100-year flood profile is required. A hydraulic model is not required for areas which do not have detailed flooding; however, BFEs may not be added to the revised FIRM. If a hydraulic model is developed for the area, items 3 and 4 described below must be submitted.

If hydraulic models are not developed, hydraulic analyses for existing or pre-project conditions and revised or post-project conditions must be submitted. All calculations must be submitted for these analyses. (See item 6 below)

1. Duplicate Effective Model — Natural ☐ Floodway ☐

Copies of the hydraulic analysis used in the effective FIS, referred to as the effective models *(10-, 50-, 100-, and 500-year multi-profile runs and the floodway run)* must be obtained and then reproduced on the requestor's equipment to produce the duplicate effective model. This is required to assure that the effective model input data has been transferred correctly to the requestor's equipment and to assure that the revised data will be integrated into the effective data to provide a continuous FIS model upstream and downstream of the revised reach.

2. Corrected Effective Model — Natural ☐ Floodway ☐

The corrected effective model is the model that corrects any errors that occur in the duplicate effective model, adds any additional cross sections to the duplicate effective model, or incorporates more detailed topographic information than that used in the currently effective model. The corrected effective model must not reflect any man-made physical changes since the date of the effective model. An error could be a technical error in the modeling procedures, or any construction in the floodplain that occurred prior to the date of the effective model but was not incorporated into the effective model.

3. Existing or Pre-Project Conditions Model — Natural ☒ Floodway ☐

The duplicate effective or corrected model is modified to produce the existing or pre-project conditions model to reflect any modifications that have occurred within the floodplain since the date of the effective model but prior to the construction of the project for which the revision is being requested. If no modification has occurred since the date of the effective model, then this model would be identical to the corrected effective or duplicate effective model.

4. Revised or Post-Project Conditions Model — Natural ☐ Floodway ☐

The existing or pre-project conditions model *(or duplicate effective or corrected effective model, as appropriate)* is revised to reflect revised or post-project conditions. This model must incorporate any physical changes to the floodplain since the effective model was produced as well as the effects of the project. When the request is for proposed project this model should reflect proposed conditions.

5. Other: Please attach a sheet describing all other models submitted. — Natural ☐ Floodway ☐

6. Hydraulic Analyses (Only if Hydraulic Models are not developed)

Please attach all calculations for the existing or pre-project conditions and the revised or post-project conditions. Proceed to Form 5, "Riverine/Coastal Mapping Form".

1. Discharges:

| | Upstream Limit | Downstream Limit |
|---|---|---|
| 10-year | — | — |
| 50-year | — | — |
| 100-year | 926 | 926 |
| 500-year | — | — |

Attach diagram showing changes in 100-year discharge

2. Explain how the starting water surface elevations were determined USING MANNING'S EQUATION WITH BED SLOPE DETERMINED FROM MAPS AND CHANNEL GEOMETRY DETERMINED BY SITE VISIT

3. Give range of friction loss coefficients (*Manning's "N"*) Channel ..... 0.040

Overbanks ..... 0.060

If friction loss coefficients are different anywhere along the revised reach from those used to develop the FIRM, give location, value used in the effective FIS, and revised values and an explanation as to how the revised values were determined.

| Location | FIS | Revised |
|---|---|---|
| | | |
| | | |
| | | |
| | | |

Explain: _____

4. Describe how the cross section geometry data were determined *(e.g., field survey, topographic map, taken from previous study)* and list cross sections that were added.

CROSS SECTION LOCATIONS BASED ON INFORMATION PROVIDED ON FIRM MAPS WITH ADDITIONAL LOCATIONS ADDED AT DRAINAGE BASIN AND AT CULVERTS ELEVATIONS BASED ON AERIAL MAPPING AND USGS BENCHMARKS

5. Were natural channel banks selected as the location of the left and right channel banks in the model?

☒ Yes ☐ No If no, explain why not: _____

6. Explain how reach lengths for channel and overbanks were determined:

REACH LENGTHS DETERMINED FROM INFORMATION PROVIDED ON FIRM MAPS AND ADDITIONAL CROSS-SECTIONS.

## 5. RESULTS (from model used to revise 100-year water surface elevations)

1. Do the results indicate:

a. Water surface elevations higher than end points of cross sections? ..... ☒ Yes ☐ No

b. Supercritical depth? ..... ☐ Yes ☒ No

c. Critical depth? ..... ☒ Yes ☐ No

d. Other unique situations ..... ☐ Yes ☒ No

If yes to any of the above, attach an explanation that discusses the situation and how it is presented on the profiles, tables, and maps.

2. What is the maximum change in energy gradient between cross-sections? ..... 11.02 ft

Specify location ..... SECTION 9 TO 10

3. What is the distance between the cross-sections in 2 above? ..... 567 ft

4. What is the maximum distance between cross-sections? ..... 566 ft

Specify location ..... SECTION 3 TO 4

5. Floodway determination

a. What is the maximum surcharge allowed by the community or State? ..... 1.0 foot

b. What is the maximum surcharge for the revised conditions? ..... 0.0 foot

Specify location ..... —

c. What is the maximum velocity? ..... 9.22 fps

Specify location ..... SECTION 8

d. Are there any negeative surcharge values at any cross-section? ☐ Yes ☒ No

If yes, the floodway may need to be widened. If it is not widened, please explain and indicate the maximum negative surcharge.

Explain: _____

6. Is the discharge value used to determine the floodway anywhere different from that used to determine the natural 100-year flood elevations? ..... ☐ Yes ☒ No

If Yes, explain:

7. Do 100-year water surface elevations increase at any location? ..... ☒ Yes ☐ No

If yes, please attach a list of the locations where the increases occur, state whether or not the increases are located on the requestor's property, and provide an explanation of the reason for the increases. *(For example: State if the increase is due to fill placed within the floodway fringe or placed within the currently adopted floodway limits)*

SECTIONS 6, 5 & 4 HAVE INCREASED WSE AS COMPARED TO PRE-DEVELOPED COND'S DUE TO CROSS SECTION LOCATION NEAR CULVERTS...

Please attach a completed comparison table entitled: Water Surface Elevation Check (See page 6)

6. REVISED FIRM/FBFM AND FLOOD PROFILES

A. The revised water surface elevations tie into those computed by the effective FIS Model *(10-, 50-, 100-, and 500-year)*, downstream of the project at cross-section_____ within_____feet *(vertical)* and upstream of the project at cross section_____within_____feet *(vertical)*. – NO STUDIED CROSS SECTION DATA TO TIE INTO. i.e. UNSTUDIED AREA

B. The revised floodway elevations tie into those computed by the effective FIS model, dowstream of the project at cross section_____within_____feet *(vertical)* and upstream of the project at cross section_____ within_____feet *(vertical)*. – NO STUDIED CROSS SECTION DATA TO TIE INTO, i.e. UNSTUDIED AREA

C. Attach profiles, at the same vertical and horizontal scale as the profiles in the effective FIS report, showing stream bed and profiles of all floods studied (without encroachment). Also, label all cross sections, road crossings (including low chord and top-of-road data), culverts, tributaries, corporate limits, and study limits. If channel distance has changed, the stationing should be revised for all profile sheets.

D. Attach a Floodway Data Table showing data for each cross section listed in the published Floodway Data Table in the FIS report.

Proceed to Riverine /Coastal Mapping Form

FEDERAL EMERGENCY MANAGMENT AGENCY

# WATER SURFACE ELEVATION CHECK

| COMMUNITY NAME | FLOODIND SOURCE | PROJECT NAME /IDENTIFIER |
|---|---|---|
| CANON CITY, COLORADO | NE CANON DRAINAGE AREA (SUE-BASIN FROM NE) | ORCHARD AVENUE LETTER OF MAP REVISION |

| | EFFECTIVE | | | DUPLICATE EFFECTIVE | | | CORRECTED EFFECTIVE | | | EXISTING/PRE-PROJECT | | | REVISED/PROJECT | | |
|---|---|---|---|---|---|---|---|---|---|---|---|---|---|---|---|
| SECNO | NCWSEL[1] | FCWSEL[2] | SURC.[3] | NCWSEL[1] | FCWSEL[2] | SURC.[3] | NCWSEL[1] | FCWSEL[2] | SURC.[3] | NCWSEL[1] | FCWSEL[2] | SURC.[3] | NCWSEL[1] | FCWSEL[2] | SURC.[3] |
| 11 | | | | | | | | | | 5437.82 | N/A | N/A | 5437.47 | N/A | N/A |
| 10 | | | | | | | | | | 5437.85 | N/A | N/A | 5428.04 | N/A | N/A |
| 9 | | | | | | | | | | 5428.02 | N/A | N/A | 5417.72 | N/A | N/A |
| 8 | | | | | | | | | | 5414.57 | N/A | N/A | 5409.30 | N/A | N/A |
| 7 | | | | | | | | | | 5409.34 | N/A | N/A | 5402.97 | N/A | N/A |
| 6 | | | | | | | | | | 5398.52 | N/A | N/A | 5403.17 | N/A | N/A |
| 5.8 | | | | | | | | | | 5396.97 | N/A | N/A | — | — | — |
| 5 | | | | | | | | | | 5392.73 | N/A | N/A | 5396.45 | N/A | N/A |
| 4 | | | | | | | | | | 5390.20 | N/A | N/A | 5390.13 | N/A | N/A |
| 3 | | | | | | | | | | 5377.40 | N/A | N/A | 5375.69 | N/A | N/A |
| 2 | | | | | | | | | | 5369.20 | N/A | N/A | 5367.59 | N/A | N/A |
| 1 | | | | | | | | | | 5369.20 | N/A | N/A | 5365.10 | N/A | N/A |
| | | | | | | | | | | | | | | | |

COMMENTS:

1-100-year (natural) Water Surface Elevation  2-Encroachment (floodway) Water Surface Elevation  3-Surcharge Value

Include all cross sections in the models between tie-in points. Any interpolated values should be indicated in parentheses.

ORCHARD AVENUE LOMR
RIVERLINE HYDRAULIC ANALYSIS FORM

Section 5 - Results

Item 1c. Critical Depth

Critical depth occurs at the following Sections: 3, 7, 8, & 10. Critical flow is present at Section 3 due to two 90 bends in the narrow channel. Sections 7 & 8 reach critical depth due to a flow constriction. Section 10 is located at the downstream end of a culvert which has a drop condition at the pipe outlet. No other sections reach critical depth.

| FEDERAL EMERGENCY MANAGEMENT AGENCY<br>**RIVERINE/COASTAL MAPPING FORM** | *O.M.B. Burden No. 3067-0148*<br>*Expires July 31, 1997* | *FEMA USE ONLY* |
|---|---|---|

## PUBLIC BURDEN DISCLOSURE NOTICE

Public reporting burden for this form is estimated to average 1.5 hours per response. The burden estimate includes the time for reviewing instructions, searching existing data sources, gathering and maintaining the needed data, and completing and reviewing the form. Send comments regarding the accuracy of the burden estimate and any suggestions for reducing this burden, to: Information Collections Management, Federal Emergency Management Agency, 500 C Street, S.W., Washington, DC 20472; and to the Office of Management and Budget, Paperwork Reduction Project (3067-0148), Washington, DC 20503.

Community Name: CANON CITY, COLORADO

Flooding Source: NE CANON DRAINAGE AREA (SUB-BASIN FROM NE)

Project Name/Identifier: ORCHARD AVENUE LETTER OF MAP REVISION

### 1. MAPPING CHANGES

1. A topographic work map of suitable scale, contour interval, and planimetric definition must be submitted showing *(indicate N/A when not applicable)*:

| | | Included | | |
|---|---|---|---|---|
| A. | Revised approximate 100-year floodplain boundaries (Zone A) | ☒ Yes | ☐ No | ☐ N/A |
| B. | Revised detailed 100- and 500-year floodplain boundaries | ☐ Yes | ☒ No | ☐ N/A |
| C. | Revised 100-year floodway boundaries | ☒ Yes | ☐ No | ☐ N/A |
| D. | Location and alignment of all cross sections used in the revised hydraulic model with stationing control indicated | ☒ Yes | ☐ No | ☐ N/A |
| E. | Stream alignments, road and dam alignments | ☐ Yes | ☒ No | ☐ N/A |
| F. | Current community boundaries | ☐ Yes | ☐ No | ☒ N/A |
| G. | Effective 100- and 500-year floodplain and 100-year floodway boundaries from the FIRM/FBFM reduced or enlarged to the scale of the topographic work map | ☐ Yes | ☐ No | ☒ N/A |
| H. | Tie-ins between the effective and revised 100- and 500-year floodplains and 100-year floodway boundaries | ☐ Yes | ☐ No | ☒ N/A |
| I. | The requestor's property boundaries and community easements | ☒ Yes | ☐ No | ☐ N/A |
| J. | The signed certification of a registered professional engineer | ☒ Yes | ☐ No | ☐ N/A |
| K. | Location and description of reference marks | ☒ Yes | ☐ No | ☐ N/A |
| L. | Vertical datum (example: NGVD, NAVD etc.) | ☒ Yes | ☐ No | ☐ N/A |
| M. | Coastal zone designations tie into adjacent areas not being revised | ☐ Yes | ☐ No | ☒ N/A |
| N. | Location and alignment of all coastal transects used to revise the coastal analyses | ☐ Yes | ☐ No | ☒ N/A |

If any of the items above are marked no or N/A, please explain: NO DATA AVAILABLE

2. What is the source and date of the updated topographic information *(example: orthophoto maps, July 1985; field survey, May 1979, beach profiles, June 1987, etc.)*? AERIAL PHOTOGRAPHY, 1979, 1995 & FIELD SURVEY FLOOD HAZARD ANALYSIS, JANUARY 1976

3. What is the scale and contour interval of the following workmaps?

   a. Effective FIS 400' scale 2' Contour interval

   b. Revision Request 100' scale 1' Contour interval

NOTE: Revised topographic information must be of equal or greater detail.

4. Attach an annotated FIRM and FBFM at the scale of the effective FIRM and FBFM showing the revised 100-year and 500-year floodplains and the 100-year floodway boundaries and how they tie into those shown on the effective FIRM and FBFM downstream and upstream of the revision or adjacent to the area of revision for coastal studies.

Attach additional pages if needed.

5. Flood Boundaries and 100-year water surface elevations:

Has the 100-year floodplain been shifted or increased or the 100-year water surface elevation increased at any location on property other than the requestor's or community's? ☐ Yes ☒ No

If yes, please give the location of shift or increase and an explanation for the increase.

a. Have the affected property owners been notified of this shift or increase and the effect it will have on their property? ..... ☐ Yes ☐ No

If yes, please attach letters from these property owners stating they have no objections to the revised flood boundaries if a LOMR is being requested.

b. What is the number of insurable structures that will be impacted by this shift or increase? _____

6. Have the floodway boundaries shifted or increased at any location compared to those shown on the effective FBFM or FIRM? ..... ☒ Yes ☐ No

If yes, explain:

PREVIOUS FLOODWAY DELINEATION WAS APPROXIMATE

7. If a V- zone has been designated, has it been delineated to extend landward to the heel of the primary frontal dune? ☐ Yes ☒ No

If no, explain:

8. Manual or digital map submission:

☒ Manual

☐ Digital

Digital map submissions may be used to update digital FIRMs (DFIRMs). For updating DFIRMs, these submissions must be coordinated with FEMA Headquarters as far in advance of submission as possible.

## 2. EARTH FILL PLACEMENT

1. The fill is: ☒ Existing ☐ Proposed

2. Has fill been/will be placed in the regulatory floodway? ..... ☒ Yes ☐ No
If yes, please attach completed Riverine Hydraulic Analysis Form.

3. Has fill been/will be placed in floodway fringe *(area between the floodway and 100-year floodplain boundaries)*? ..... ☒ Yes ☐ No

If yes, then complete A, B, C, and D below.

A. Are fill slopes for granular materials steeper than one vertical on one-and-one-half horizontal? ..... ☐ Yes ☒ No

If yes, justify steeper slopes_____

B. Is adequate erosion protection provided for fill slopes exposed to moving flood waters? *(Slopes exposed to flows with velocities of up to 5 feet per second (fps) during the 100-year flood must, at a minimum, be protected by a cover of grass, vines, weeds, or similar vegetation; slopes exposed to flows with velocities greater than 5 fps during the 100-year flood must, at a minimum, be protected by stone or rock riprap.)* ..... ☒ Yes ☐ No

If no, describe erosion protection provided_____

C. Has all fill placed in revised 100-year floodplain been compacted to 95 percent of the maximum density obtainable with the Standard Proctor Test Method or acceptable equivalent method? ☒ Yes ☐ No

D. Can structures conceivably be constructed on the fill at any time in the future? ☐ Yes ☒ No

If yes, provide certification of fill compaction (item C. above) by the community's NFIP permit official, a registered professional engineer, or an accredited soils engineer.

4. Has fill been/will be placed in a V-zone? ☐ Yes ☒ No

If yes, is the fill protected from erosion by a flood control structure such as a revetment or seawall? ☐ Yes ☐ No

If yes, attach the coastal structures form.

| FEDERAL EMERGENCY MANAGEMENT AGENCY<br>**CHANNELIZATION FORM** | *O.M.B. Burden No. 3067-0148*<br>*Expires July 31, 1997* | **FEMA USE ONLY** |
|---|---|---|

## PUBLIC BURDEN DISCLOSURE NOTICE

Public reporting burden for this form is estimated to average 1.75 hours per response. The burden estimate includes the time for reviewing instructions, searching existing data sources, gathering and maintaining the needed data, and completing and reviewing the form. Send comments regarding the accuracy of the burden estimate and any suggestions for reducing this burden, to: Information Collections Management, Federal Emergency Management Agency, 500 C Street, S.W., Washington, DC 20472; and to the Office of Management and Budget, Paperwork Reduction Project (3067-0148), Washington, DC 20503.

Community Name: CANON CITY, COLORADO

Flooding Source: NE CANON DRAINAGE AREA (SUB-BASIN FROM NE)

Project Name/Identifier: ORCHARD AVENUE LETTER OF MAP REVISION

### 1. EXTENT OF CHANNELIZATION

Downstream limit: _____

Upstream limit: _____

### 2. CHANNEL DESCRIPTION

1. Describe the inlet to the channel FLOW ENTERS THE CHANNEL AT HIGH STREET VIA 2 CMP's SIZED AT 6ft AND 5ft IN DIAMETER

2. Briefly describe the shape of the channel *(both cross sectional and planimetric configuration)* and its lining *(channel bottom and sides)* CHANNEL TYPICALLY TRAPEZOIDAL IN SECTION AND STRAIGHT, (NOT MEANDERING). CHANNEL BOTTOM CONSISTS OF .15 TO 20 FT.

3. Describe the outlet from the channel FLOW ENTERS A 42" RCP AT CENTRAL AVENUE AND CONTINUES SOUTH

4. The channelization includes:

- ☐ Levees *(Attach Levee Form)*
- ☒ Drop structures
- ☐ Superelevated sections
- ☒ Transitions in cross sectional geometry
- ☒ ~~Debris basin~~/detention basin
- ☐ Energy dissipater
- ☐ Other _____

5. Attach the following:

   a. Certified engineering drawings showing channel alignment and locations of inlet, outlet, and items checked in item 4

   b. Typical cross sections and profiles of channel banks and invert

## 3. HYDRAULIC CONSIDERATIONS

1. What is the 100-year discharge? ..... 926 cfs
2. Do the cross sections in the hydraulic model match the typical cross sections in the plans? ☒ Yes ☐ No
3. Are the channel banks higher than the 100- year flood elevations everywhere? ..... ☐ Yes ☒ No
4. Are the channel banks higher than the 100-year flood energy grade lines everywhere? .. ☐ Yes ☒ No
5. Is the land on both sides of the channel above the adjacent 100-year flood elevation at all points along the channel? ..... ☐ Yes ☒ No
6. What is the range of freeboard? ..... 0 - 2 feet
7. What is the range of the 100-year flood velocities? ..... 0.20 - 9.22 ft/sec
8. What is the lining type? (both bottom and sides) ROCK RIPRAP IN HIGH VELOCITY AREAS

   Explain how the channel lining prevents erosion and maintains channel stability *(attach documentation)*

   _____

   _____

9. What is the design elevation in the channel based on?

   ☒ Subcritical flow
   ☐ Critical flow
   ☐ Supercritical flow
   ☐ Energy grade line

   Is 100-year flood profile based on the above type of flow? ..... ☒ Yes ☐ No

   If no, explain: _____

   _____

10. Is there the potential for a hydraulic jump at the following locations?

    Inlet to channel ..... ☐ Yes ☒ No
    Outlet of channel ..... ☐ Yes ☒ No
    At Drop Structures ..... ☐ Yes ☒ No
    At Transitions ..... ☐ Yes ☒ No
    Other locations. Explain: _____

    If the answer to any of the above is yes, please explain how the hydraulic jump is controlled and the effects of the hydraulic jump on the stability of the channel.

    Explain: _____

    _____

    _____

    _____

    _____

    _____

    _____

## 4. SEDIMENT TRANSPORT CONSIDERATIONS

1. A. Is there any indication from historical records that sediment transport (including scour and deposition) can affect the 100-year water surface elevations and/or the capacity of the channel? ..... ☐ Yes ☒ No

   B. Based on the conditions of the watershed and stream bed, is there a potential for sediment transport (including scour and deposition) to affect the 100-year water surface elevations and /or the capacity of the channel? ..... ☐ Yes ☒ No

2. If the answer to either 1A or 1B is yes:

   A. What is the estimated sediment (bed) load?
   _____cfs (attach gradation curve)

   Explain method used to estimate load_____

   _____

   _____

   _____

   _____

   B. Is the 100-year flood velocity anywhere within the channel less than the 100-year flood velocity of the inlet? ☐ Yes ☐ No

   C. Will sediment accumulate anywhere within the channel? ☐ Yes ☐ No

   D. Will deposition or scour occur at or near the inlet? ☐ Yes ☐ No

   E. Will deposition or scour occur at or near the outlet? ☐ Yes ☐ No

Attach documentation showing affects on the Hydrologic and Hydraulic analyses

FEDERAL EMERGENCY MANAGEMENT AGENCY
BRIDGE/CULVERT FORM

O.M.B. Burden No. 3067-0148
Expires July 31, 1997

## PUBLIC BURDEN DISCLOSURE NOTICE

Public reporting burden for this form is estimated to average 2 hours per response. The burden estimate includes the time for reviewing instructions, searching existing data sources, gathering and maintaining the needed data, and completing and reviewing the form. Send comments regarding the accuracy of the burden estimate and any suggestions for reducing this burden, to: Information Collections Management, Federal Emergency Management Agency, 500 C Street, S.W., Washington, DC 20472; and to the Office of Management and Budget, Paperwork Reduction Project (3067-0148), Washington, DC 20503.

Community Name: CANON CITY, COLORADO

Flooding Source: NE CANON DRAINAGE AREA (SUB-BASIN FROM NE)

Project Name/Identifier: ORCHARD AVENUE LETTER OF MAP REVISION

### 1. IDENTIFIER

1. Name of roadway, railroad, etc.: HIGH STREET

2. Location of bridge/culvert along flooding source (in terms of stream distance or cross-section identifier): BETWEEN SECTION 10 AND 11

3. This revision reflects *(check one of the following)*:

- [X] New bridge/culvert not modeled in the FIS
- [ ] Modified bridge/culvert previously modeled in the FIS
- [ ] New analysis of bridge/culvert previously modeled in the FIS

*(Explain why new analysis was performed)*

### 2. BACKGROUND

Provide the following information about the structure:

1 Dimension, material, and shape (e.g. two 10 x 5 feet reinforced concrete box culvert; three 30-foot span bridge with 2 rows of two 3- foot diameter circular piers; 40-foot wide ogee shape spillway) TWO CORRUGATED METAL PIPES 5-FOOT AND 6-FOOT IN DIAMETER, 1 FOOT APART

2. Entrance geometry of culvert/type of bridge opening (e.g. 30 ° - 75 ° wing walls with square top edge, sloping embankments and vertical abutments) VERTICAL HEAD WALL WITH TWO FEET OF ALLOWABLE HEAD ABOVE 6 FT. DIA. PIPE

3. Hydraulic model used to analyze the structure (*e.g., HEC-2 with special bridge routine, WSPRO, HY8*) HEC-RAS

If different than hydraulic analysis for the flooding source, justify why the hydraulic analysis used for the flooding source could not analyze the structure(s). *(Attach justification)*

Note: If any items do not apply to submitted hydraulic analysis, indicate by N/A
* One form per new/revised bridge/culvert

Sketch the downstream face of the structure together with the road profile. Show, at a minimum, the maximum low chord elevation, invert elevation, minimum top of road elevation, and ineffective flow widths.

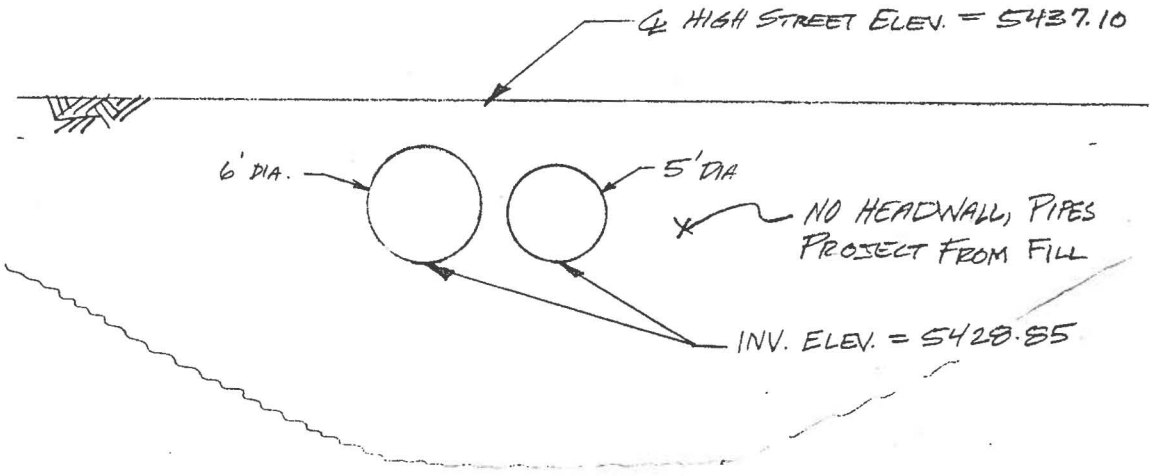


Sketch the upstream face of the structure together with the road profile. Show, at a minimum, the maximum low chord elevation, invert elevation, and minimum top of road elevation.

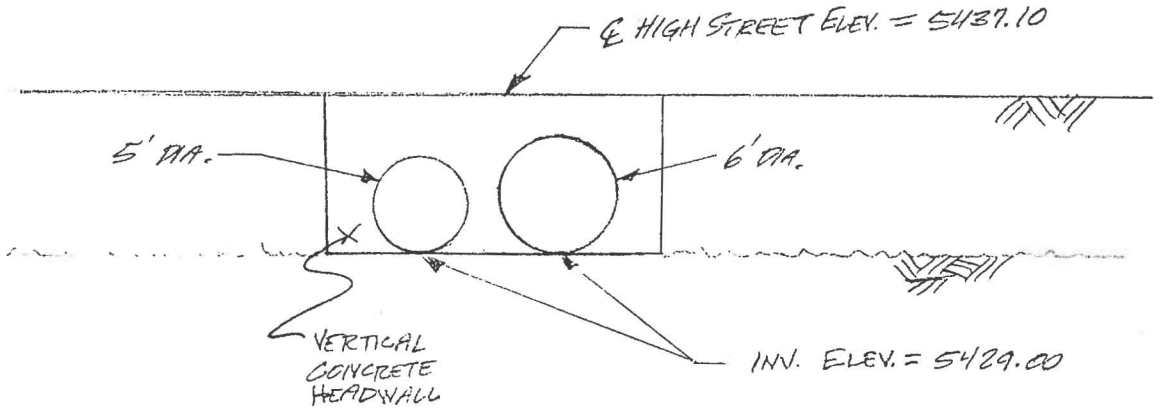

Sketch the plan view of the structure(s) Show, at a minimum, the skew angle, cross-section locations, distances between cross sections, and length of structure (s).

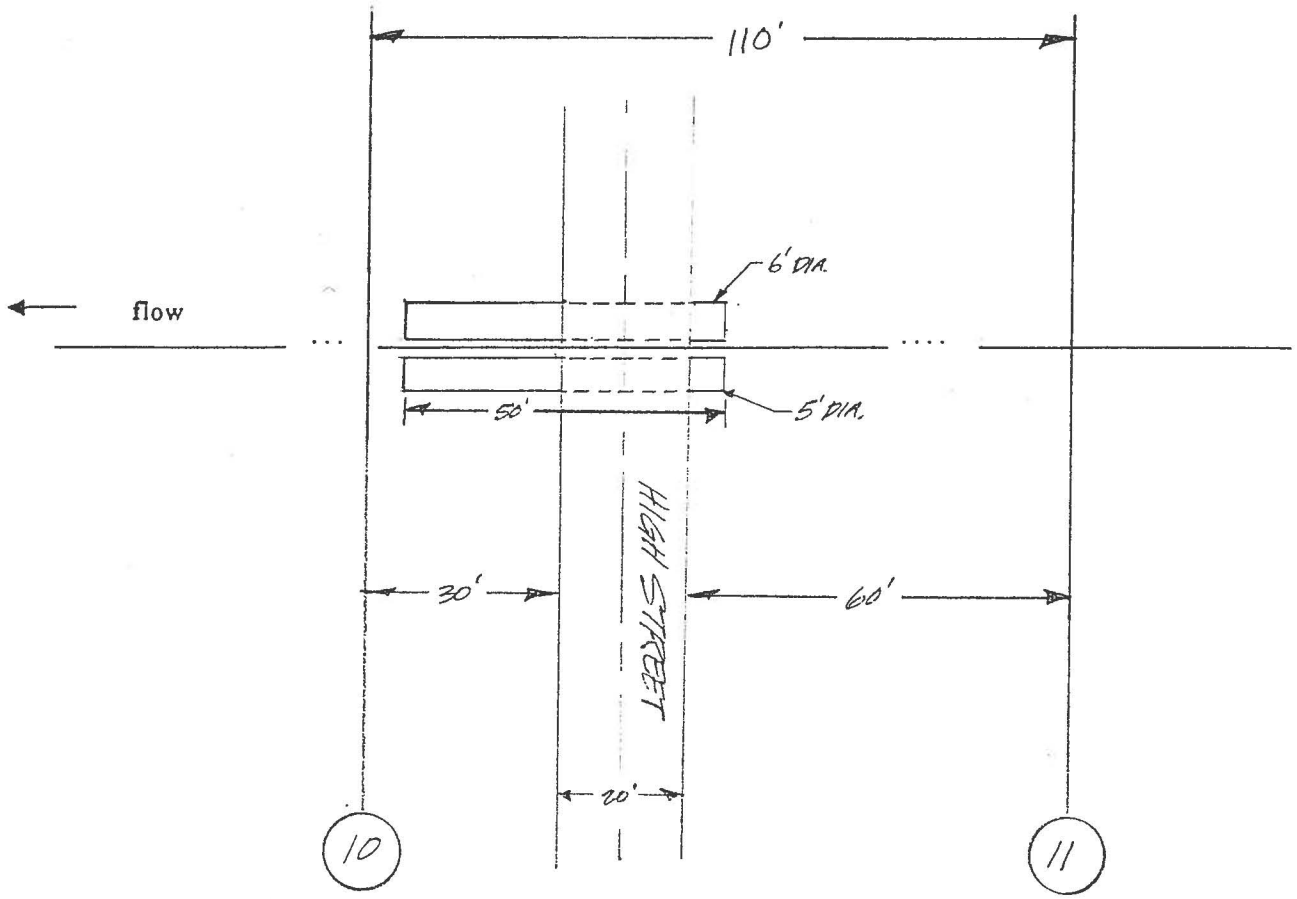


Attach plans of the structure (s) certified by a registered Professional Engineer.
CULVERTS INSTALLED BY FREMONT COUNTY ROAD DEPARTMENT.

| | |
|---|---|
| Culvert length or bridge width (ft) | 50 ft |
| Calculated culvert/bridge area (ft²) by the hydraulic model, if applicable | N/A |
| Total culvert/bridge area (ft²) | ≈ 48 ft² |

Elevations Above Which Flow is Effective for Overbanks

| | Left Overbank | Right Overbank |
|---|---|---|
| Upstream face | 5436.00 | 5436.00 |
| Downstream face | 5432.91 | 5433.00 |

Minimum Top of Road Elevation

| | Left Overbank | Right Overbank |
|---|---|---|
| Upstream face | 5436.55 | 5436.55 |
| Downstream face | 5436.55 | 5436.55 |

| 100-Year Elevations | Water Surface Elevations | Energy Gradient Elevations |
|---|---|---|
| Upstream face | 5437.47 | 5437.48 |
| Downstream face | 5428.04 | 5429.05 |

| Discharge | Low Flow (5'+6' PIPE) | Pressure Flow | Weir Flow | Total Flow |
|---|---|---|---|---|
| Amount of flow through/over the structure (s) (cfs) | 518.58 | 0 | 407.42 | 926 |

The maximum depth of flow over the roadway/railroad (ft.) ..... 0.92 ft

Weir length (ft.) ..... 623.10 ft

| Top Widths | Total Floodplain Width | Total Effective Flow Width | Floodway Width |
|---|---|---|---|
| Upstream face | 668.67 | 469.42 | — |
| Downstream face | 58.92 | 96.82 | — |

Loss Coefficients

| | |
|---|---|
| Entrance loss coefficient | 0.5 |
| Manning's "n" value assigned to the structure(s) | 0.024 |
| Friction loss coefficient through structure (s) | 0.82 + 0.73 (5' + 6') |
| Other loss coefficients (e.g., bend manhole, etc.) | N/A |
| Total loss coefficient | 0.5 |
| Weir coefficient | 2.60 |
| Pier coefficient | N/A |
| Contraction loss coefficient | 0.1 |
| Expansion loss coefficient | 0.3 |

## 4. SEDIMENT TRANSPORT CONSIDERATIONS

1. A. Is there any indication from historical records that sediment transport *(including scour and deposition)* can affect the 100-year water surface elevations? ..... ☐ Yes ☒ No

   B Based on the conditions *(such as geomorphology, vegetative cover and development of the watershed and stream bed, and bank conditions)*, is there a potential for debris and sediment transport *(including scour and deposition)* to affect the 100-year water surface elevations and/or conveyance capacity through the bridge/culvert? ..... ☐ Yes ☒ No

2. If the answer to either 1A or 1B is yes:

   A. What is the estimated sediment *(bed material)* load?
   _____cfs *(attach gradation curve)*

   Explain method used to estimate the sediment transport and the depth of scour and/or deposition_____

   B. Will sediment accumulate anywhere through the bridge/culvert? ☐ Yes ☐ No

   If yes, explain the impact on the conveyance capacity through the bridge/culvert?_____

## 5. FLOODWAY ANALYSIS

Explain method of bridge encroachment (floodway run) N/A

Comments *(explain any unusual situations)*:

Attach analysis.

FEDERAL EMERGENCY MANAGEMENT AGENCY
**BRIDGE/CULVERT FORM**

O.M.B. Burden No. 3067-0148
*Expires July 31, 1997*

## PUBLIC BURDEN DISCLOSURE NOTICE

Public reporting burden for this form is estimated to average 2 hours per response. The burden estimate includes the time for reviewing instructions, searching existing data sources, gathering and maintaining the needed data, and completing and reviewing the form. Send comments regarding the accuracy of the burden estimate and any suggestions for reducing this burden, to: Information Collections Management, Federal Emergency Management Agency, 500 C Street, S.W., Washington, DC 20472; and to the Office of Management and Budget, Paperwork Reduction Project (3067-0148), Washington, DC 20503.

Community Name: CANON CITY, COLORADO

Flooding Source: NE CANON DRAINAGE AREA (SUB-BASIN FROM NE)

Project Name/Identifier: ORCHARD AVENUE LETTER OF MAP REVISION

### 1. IDENTIFIER

1. Name of roadway, railroad, etc.: 42" BASIN CULVERT

2. Location of bridge/culvert along flooding source (in terms of stream distance or cross-section identifier): APPROX. 50ft NORTH OF SECTION 5

3. This revision reflects *(check one of the following)*:

   ☒ New bridge/culvert not modeled in the FIS

   ☐ Modified bridge/culvert previously modeled in the FIS

   ☐ New analysis of bridge/culvert previously modeled in the FIS

   *(Explain why new analysis was performed)* _____

### 2. BACKGROUND

Provide the following information about the structure:

1 Dimension, material, and shape (e.g. two 10 x 5 feet reinforced concrete box culvert; three 30-foot span bridge with 2 rows of two 3- foot diameter circular piers; 40-foot wide ogee shape spillway)
ONE REINFORCED CONCRETE PIPE 42" IN DIAMETER

2. Entrance geometry of culvert/type of bridge opening (e.g. 30 ° - 75 ° wing walls with square top edge, sloping embankments and vertical abutments)
MODELED AS VERTICAL HEADWALL WITH 30° WING WALLS

3. Hydraulic model used to analyze the structure (*e.g., HEC-2 with special bridge routine, WSPRO, HY8*)
HEC-RAS

If different than hydraulic analysis for the flooding source, justify why the hydraulic analysis used for the flooding source could not analyze the structure(s). *(Attach justification)*

Note: If any items do not apply to submitted hydraulic analysis, indicate by N/A
* One form per new/revised bridge/culvert

Sketch the downstream face of the structure together with the road profile. Show, at a minimum, the maximum low chord elevation, invert elevation, minimum top of road elevation, and ineffective flow widths.

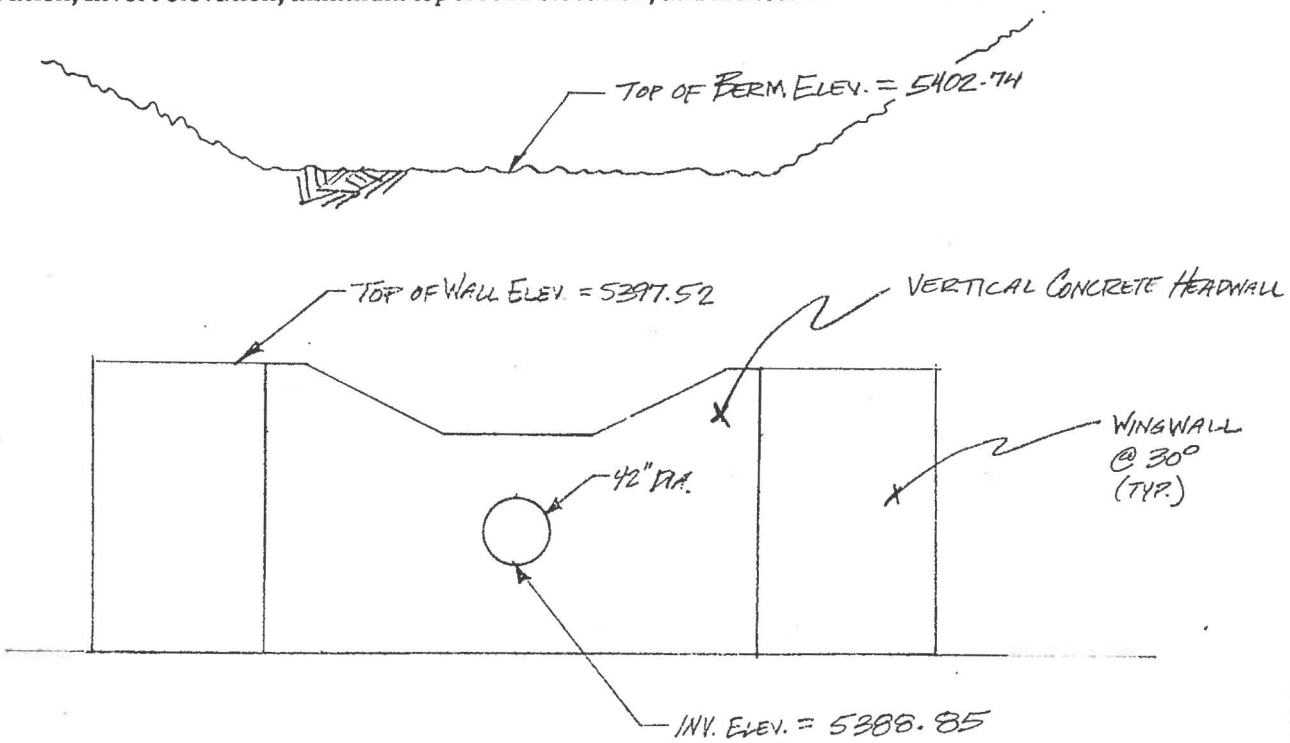


Sketch the upstream face of the structure together with the road profile. Show, at a minimum, the maximum low chord elevation, invert elevation, and minimum top of road elevation.

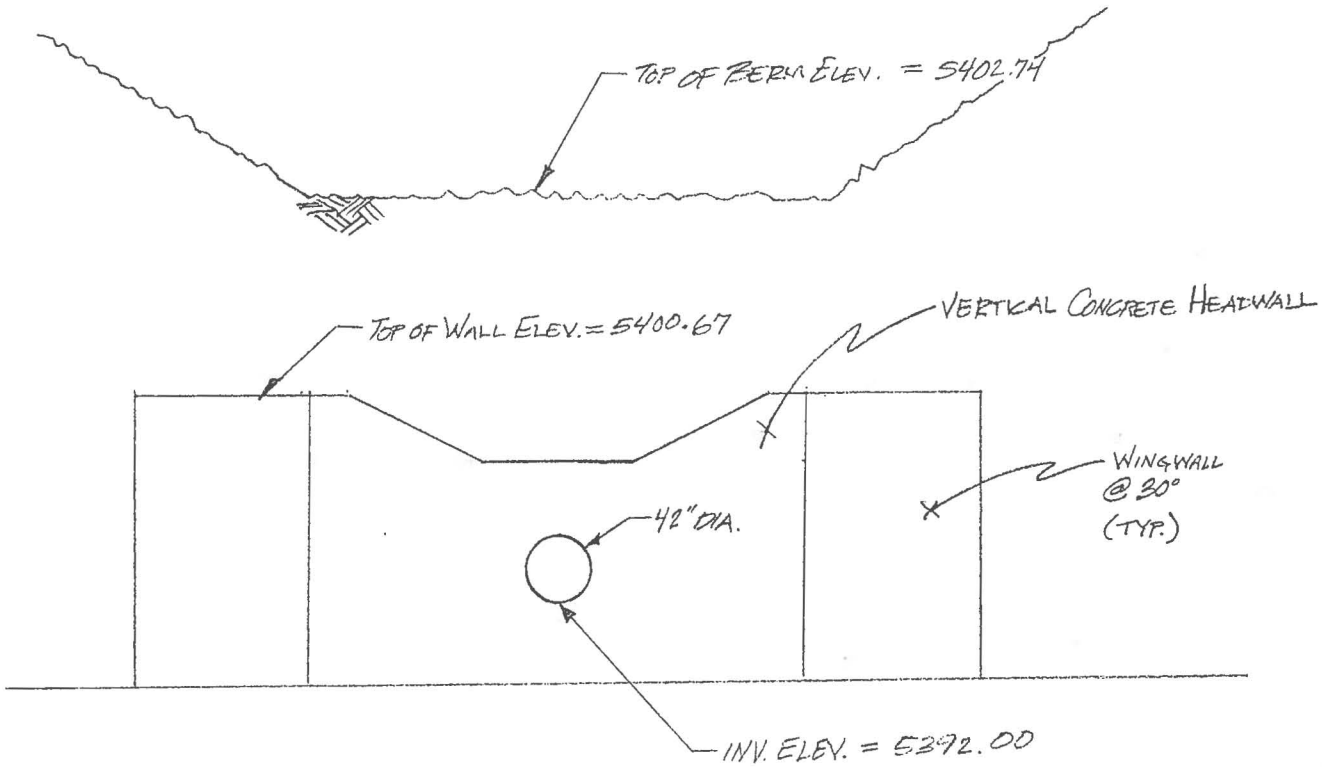

Sketch the plan view of the structure(s) Show, at a minimum, the skew angle, cross-section locations, distances between cross sections, and length of structure (s).

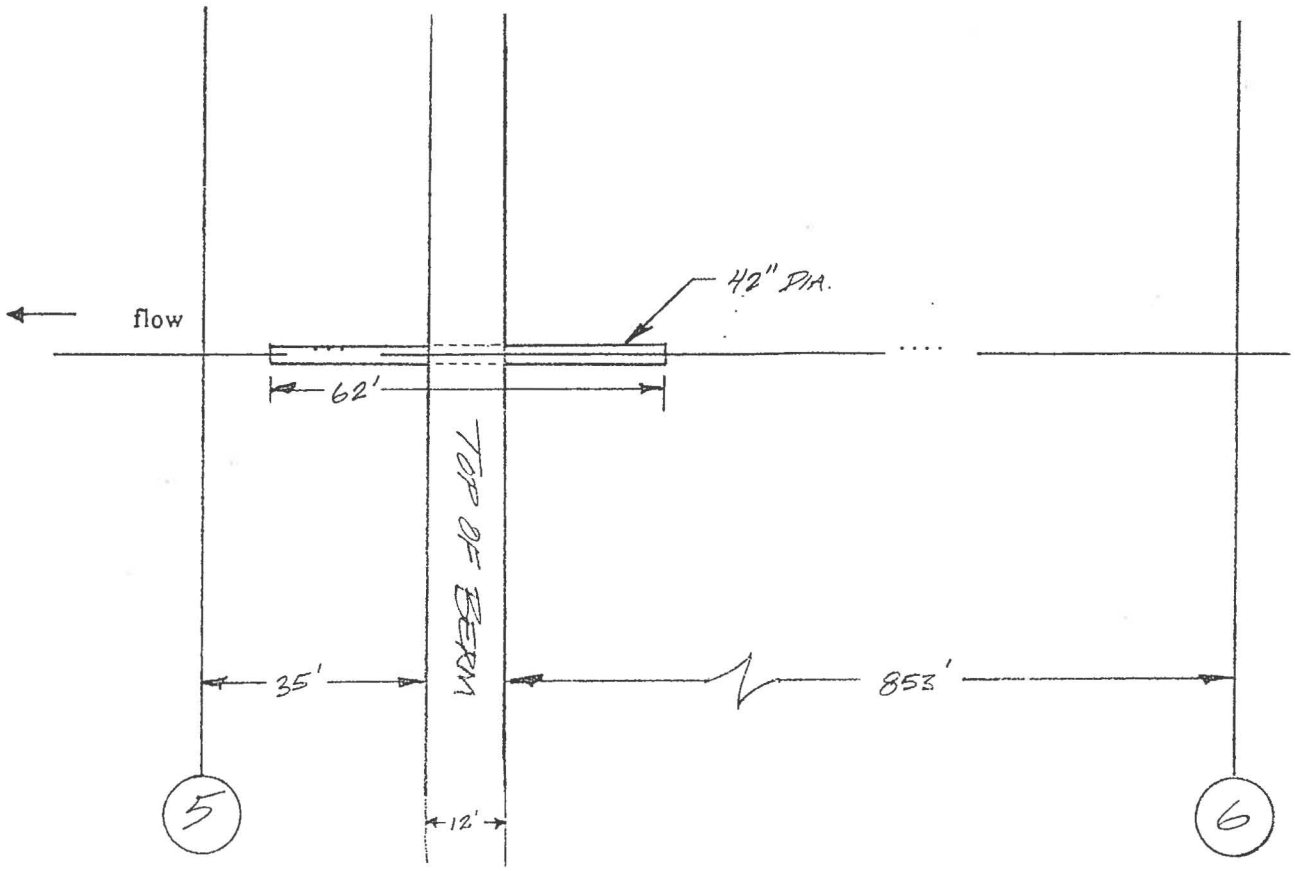


Attach plans of the structure (s) certified by a registered Professional Engineer.

| | |
|---|---|
| Culvert length or bridge width (ft) | 62 ft |
| Calculated culvert/bridge area (ft²) by the hydraulic model, if applicable | N/A |
| Total culvert/bridge area (ft²) | 9.62 ft² |

Elevations Above Which Flow is Effective for Overbanks

| | Left Overbank | Right Overbank |
|---|---|---|
| Upstream face | 5396.00 | 5396.00 |
| Downstream face | 5399.00 | 5399.00 |

Minimum Top of Road Elevation

| | Left Overbank | Right Overbank |
|---|---|---|
| Upstream face | 5403 | 5403 |
| Downstream face | 5403 | 5403 |

| 100-Year Elevations | Water Surface Elevations | Energy Gradient Elevations |
|---|---|---|
| Upstream face | 5407.42 | 5407.42 |
| Downstream face | 5397.77 | 5397.76 |

| Discharge | Low Flow | Pressure Flow | Weir Flow | Total Flow |
|---|---|---|---|---|
| Amount of flow through/over the structure (s) (cfs) | 174.97 | 0 | 750.88 | ~926 |

| | |
|---|---|
| The maximum depth of flow over the roadway/railroad (ft.) | 4.42 |
| Weir length (ft.) | 748.83 |

| Top Widths | Total Floodplain Width | Total Effective Flow Width | Floodway Width |
|---|---|---|---|
| Upstream face | 547.49 | 490.67 | — |
| Downstream face | 29.62 | 42.81 | — |

Loss Coefficients

| | |
|---|---|
| Entrance loss coefficient | 0.5 |
| Manning's "n" value assigned to the structure(s) | 0.013 |
| Friction loss coefficient through structure (s) | 1.94 |
| Other loss coefficients (e.g., bend manhole, etc.) | N/A |
| Total loss coefficient | 0.5 |
| Weir coefficient | 2.60 |
| Pier coefficient | N/A |
| Contraction loss coefficient | 0.1 |
| Expansion loss coefficient | 0.3 |

## 4. SEDIMENT TRANSPORT CONSIDERATIONS

1. A. Is there any indication from historical records that sediment transport (*including scour and deposition)* can affect the 100-year water surface elevations? ..... ☐ Yes ☒ No

   B Based on the conditions *(such as geomorphology, vegetative cover and development of the watershed and stream bed, and bank conditions)*, is there a potential for debris and sediment transport *(including scour and deposition)* to affect the 100-year water surface elevations and/or conveyance capacity through the bridge/culvert? ..... ☐ Yes ☒ No

2. If the answer to either 1A or 1B is yes:

   A. What is the estimated sediment *(bed material)* load?
   _____cfs *(attach gradation curve)*

   Explain method used to estimate the sediment transport and the depth of scour and/or deposition_____

   B. Will sediment accumulate anywhere through the bridge/culvert? ☐ Yes ☐ No

   If yes, explain the impact on the conveyance capacity through the bridge/culvert?_____

## 5. FLOODWAY ANALYSIS

Explain method of bridge encroachment (floodway run) N/A

Comments *(explain any unusual situations)*:

Attach analysis.

FEDERAL EMERGENCY MANAGEMENT AGENCY
BRIDGE/CULVERT FORM

O.M.B. Burden No. 3067-0148
Expires July 31, 1997

## PUBLIC BURDEN DISCLOSURE NOTICE

Public reporting burden for this form is estimated to average 2 hours per response. The burden estimate includes the time for reviewing instructions, searching existing data sources, gathering and maintaining the needed data, and completing and reviewing the form. Send comments regarding the accuracy of the burden estimate and any suggestions for reducing this burden, to: Information Collections Management, Federal Emergency Management Agency, 500 C Street, S.W., Washington, DC 20472; and to the Office of Management and Budget, Paperwork Reduction Project (3067-0148), Washington, DC 20503.

Community Name: CANON CITY, COLORADO

Flooding Source: NE CANON DRAINAGE AREA ( SUB-BASIN FROM NE)

Project Name/Identifier: ORCHARD AVENUE LETTER OF MAP REVISION

### 1. IDENTIFIER

1. Name of roadway, railroad, etc.: SOUTH STREET

2. Location of bridge/culvert along flooding source (in terms of stream distance or cross-section identifier): APPROX. 40 ft. NORTH OF SECTION 4

3. This revision reflects *(check one of the following)*:

- [x] New bridge/culvert not modeled in the FIS
- [ ] Modified bridge/culvert previously modeled in the FIS
- [ ] New analysis of bridge/culvert previously modeled in the FIS

*(Explain why new analysis was performed)*

### 2. BACKGROUND

Provide the following information about the structure:

1 Dimension, material, and shape (e.g. two 10 x 5 feet reinforced concrete box culvert; three 30-foot span bridge with 2 rows of two 3- foot diameter circular piers; 40-foot wide ogee shape spillway) ONE REINFORCED CONCRETE PIPE 48" IN DIAMETER

2. Entrance geometry of culvert/type of bridge opening (e.g. 30°- 75° wing walls with square top edge, sloping embankments and vertical abutments) VERTICAL HEADWALL WITH 30° WING WALLS

3. Hydraulic model used to analyze the structure (*e.g., HEC-2 with special bridge routine, WSPRO, HY8*) HEC-RAS

If different than hydraulic analysis for the flooding source, justify why the hydraulic analysis used for the flooding source could not analyze the structure(s). *(Attach justification)*

Note: If any items do not apply to submitted hydraulic analysis, indicate by N/A
* One form per new/revised bridge/culvert

Sketch the downstream face of the structure together with the road profile. Show, at a minimum, the maximum low chord elevation, invert elevation, minimum top of road elevation, and ineffective flow widths.

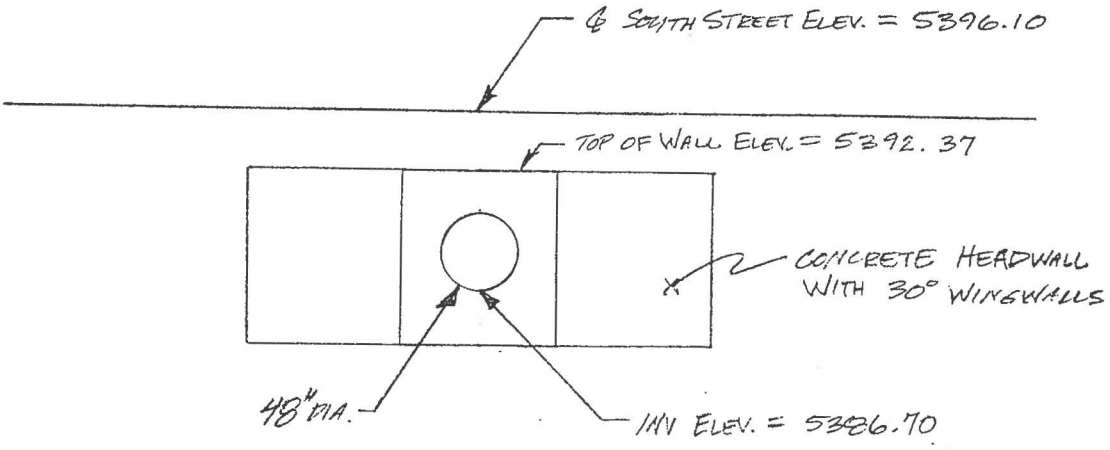


Sketch the upstream face of the structure together with the road profile. Show, at a minimum, the maximum low chord elevation, invert elevation, and minimum top of road elevation.

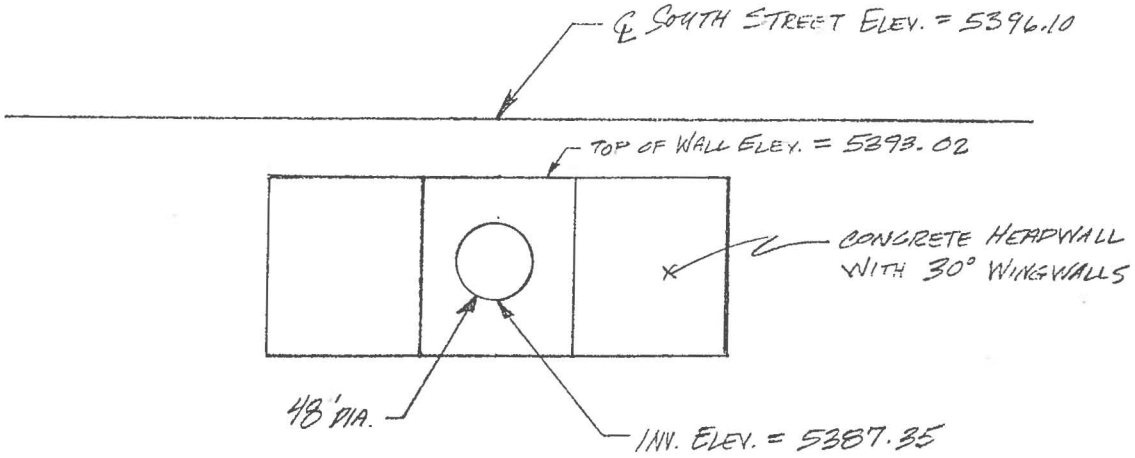

Sketch the plan view of the structure(s) Show, at a minimum, the skew angle, cross-section locations, distances between cross sections, and length of structure (s).

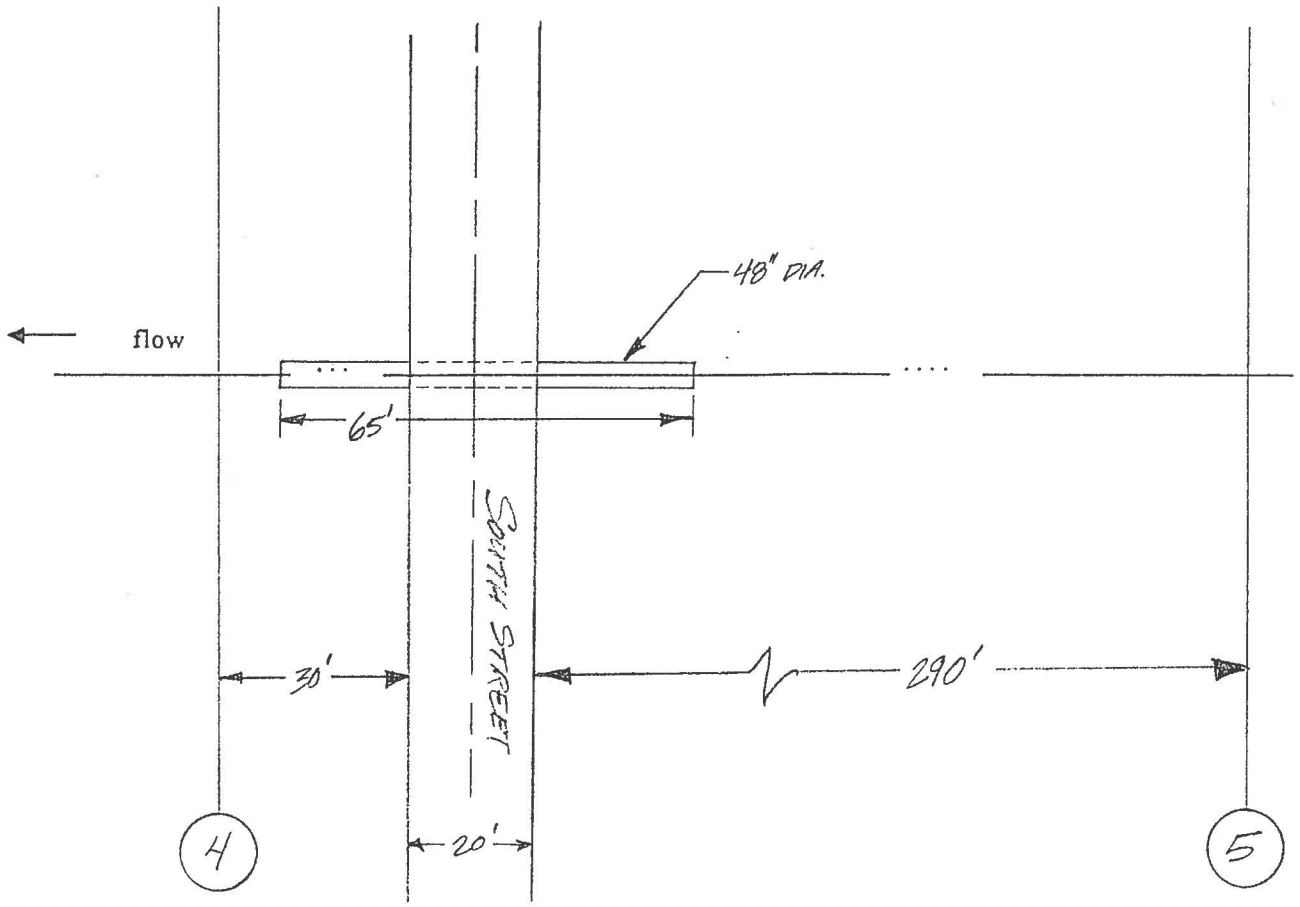


Attach plans of the structure (s) certified by a registered Professional Engineer.

| | |
|---|---|
| Culvert length or bridge width (ft) | 65 ft. |
| Calculated culvert/bridge area (ft²) by the hydraulic model, if applicable | N/A |
| Total culvert/bridge area (ft²) | 12.57 ft² |

Elevations Above Which Flow is Effective for Overbanks

| | Left Overbank | Right Overbank |
|---|---|---|
| Upstream face | 5399.00 | 5399.00 |
| Downstream face | 5396.00 | 5394.91 |

Minimum Top of Road Elevation

| | Left Overbank | Right Overbank |
|---|---|---|
| Upstream face | 5397.57 | 5397.57 |
| Downstream face | 5397.57 | 5397.57 |

| 100-Year Elevations | Water Surface Elevations | Energy Gradient Elevations |
|---|---|---|
| Upstream face | 5397.77 | 5397.78 |
| Downstream face | 5393.41 | 5393.49 |

| Discharge | Low Flow | Pressure Flow | Weir Flow | Total Flow |
|---|---|---|---|---|
| Amount of flow through/over the structure (s) (cfs) | 156.30 | 0 | 3.70 | 160 |

| | |
|---|---|
| The maximum depth of flow over the roadway/railroad (ft.) | 0.21 |
| Weir length (ft.) | 32.45 |

| Top Widths | Total Floodplain Width | Total Effective Flow Width | Floodway Width |
|---|---|---|---|
| Upstream face | 29.62 | 42.81 | — |
| Downstream face | 12.85 | 310.38 | — |

Loss Coefficients

| | |
|---|---|
| Entrance loss coefficient | 0.5 |
| Manning's "n" value assigned to the structure(s) | 0.013 |
| Friction loss coefficient through structure (s) | 0.77 |
| Other loss coefficients (e.g., bend manhole, etc.) | N/A |
| Total loss coefficient | 0.5 |
| Weir coefficient | 2.60 |
| Pier coefficient | N/A |
| Contraction loss coefficient | 0.1 |
| Expansion loss coefficient | 0.3 |

## 4. SEDIMENT TRANSPORT CONSIDERATIONS

1. A. Is there any indication from historical records that sediment transport *(including scour and deposition)* can affect the 100-year water surface elevations? ..... ☐ Yes ☒ No

   B Based on the conditions *(such as geomorphology, vegetative cover and development of the watershed and stream bed, and bank conditions)*, is there a potential for debris and sediment transport *(including scour and deposition)* to affect the 100-year water surface elevations and/or conveyance capacity through the bridge/culvert? ..... ☐ Yes ☒ No

2. If the answer to either 1A or 1B is yes:

   A. What is the estimated sediment *(bed material)* load?
   _____cfs *(attach gradation curve)*

   Explain method used to estimate the sediment transport and the depth of scour and/or deposition_____

   B. Will sediment accumulate anywhere through the bridge/culvert? ☐ Yes ☐ No

   If yes, explain the impact on the conveyance capacity through the bridge/culvert?_____

## 5. FLOODWAY ANALYSIS

Explain method of bridge encroachment (floodway run) N/A

Comments *(explain any unusual situations)*:

Attach analysis.

| FEDERAL EMERGENCY MANAGEMENT AGENCY<br>**LEVEE/FLOODWALL SYSTEM ANALYSES FORM** | *O.M.B. Burden No. 3067-0148*<br>*Expires July 31, 1997* | FEMA USE ONLY |
|---|---|---|

## PUBLIC BURDEN DISCLOSURE NOTICE

Public reporting burden for this form is estimated to average 3.0. hours per response. The burden estimate includes the time for reviewing instructions, searching existing data sources, gathering and maintaining the needed data, and completing and reviewing the form. Send comments regarding the accuracy of the burden estimate and any suggestions for reducing this burden, to: Information Collections Management, Federal Emergency Management Agency, 500 C Street, S.W., Washington, DC 20472; and to the Office of Management and Budget, Paperwork Reduction Project (3067-0148), Washington, DC 20503.

Community Name: CANON CITY, COLORADO

Flooding Source: NE CANON DRAINAGE AREA (SUB-BASIN FROM NE)

Project Name/Identifier: ORCHARD AVENUE LETTER OF MAP REVISION

**REACH TO BE REVISED**

Downstream limit: 30 ft DOWNSTREAM OF SOUTH STREET

Upstream limit: 2000 ft UPSTREAM OF SOUTH STREET

This Levee/Floodwall analysis is based on:

- ☐ upgrading of an existing levee/floodwall system
- ☒ a newly constructed levee/floodwall system
- ☐ reanalysis of an existing levee/floodwall system

**LEVEE/FLOODWALL SYSTEM ELEMENTS**

1. Levee elements and locations are:

| | | |
|---|---|---|
| ☒ earthen embankment, dike, berm etc. | Station 1 | to 11 |
| ☐ structural floodwall | Station | to |
| ☐ other (describe) | Station | to |

Structural Type:

- ☐ monolithic cast-in place reinforced concrete
- ☐ reinforced concrete masonry block
- ☐ sheet piling
- ☐ other (describe)

2. Has this levee/floodwall system been certified by a Federal agency to provide protection against the 100-year flood event?

☐ Yes ☒ No

If yes, by which agency?

If yes, complete only the interior drainage section on pages 7 and 8 of this form and the operation and maintenance section of Revision Requestor and Community Official Form.

3. Attach certified drawings containing the following information (indicate drawing sheet numbers):

a. Plan of the levee embankment and floodwall structures. Sheet Numbers 5

b. A profile of the levee/floodwall system showing the 100-year water surface elevations, levee and/or wall crest and foundation, and closure locations for the total levee system. Sheet Numbers 6

c. A profile of the 100-year water surface elevation, closure opening outlet and inlet invert elevations, type and size of opening, and kind of closure device. Sheet Numbers 6

d. A layout detail for the embankment protection measures. Sheet Numbers 3

e. Location, layout, and size and shape of the levee embankment features, foundation treatment, floodwall structure, closure structures, and pump stations. Sheet Numbers 3, 5

## FREEBOARD

1. The minimum freeboard provided above the 100-year water surface elevation is:

Riverine

| | | |
|---|---|---|
| 3.0 feet or more at the downstream end and throughout | ☒ Yes | ☐ No |
| 3.5 feet or more at the upstream end | ☒ Yes | ☐ No |
| 4.0 feet immediately upstream and downstream of all structures and constrictions | ☒ Yes | ☐ No |

Coastal

| | | |
|---|---|---|
| 1.0 foot above the height of the one percent wave for the 100-year stillwater surge elevation or maximum wave runup (whichever is greater). | ☐ Yes | ☐ No |
| 2.0 feet above 100-year stillwater surge elevation | ☐ Yes | ☐ No |

Please note, occasionally exceptions are made to the minimum freeboard requirement. If an exception is requested, attach documentation addressing Part 65.10 (b) (1) (ii) of the National Flood Insurance Program regulations.

If no is answered to any of the above, please explain where and why: _____

2. Is there an indication from historical records that ice-jamming can effect the 100-year water surface elevation?
☐ Yes ☒ No If yes, provide ice-jam analysis profile and evidence that the minimum freeboard discussed above still exists.

3. Tabulate the elevations at critical locations (tabulate values at each levee crest grade change)

| Station | Location | 100-Year Water Surface Elevation | Levee Crest | Freeboard (ft.) |
|---|---|---|---|---|
| | Upper end | | | |
| 6 | U/S BERM | 5403.17 | 5407.00 | 3.83 |
| 5 | D/S BERM | 5396.45 | 5407.00 | 10.55 |
| | | | | |
| | | | | |
| | Lower end | | | |

(Extend table on an added sheet as needed and reference)

## SEDIMENT TRANSPORT CONSIDERATIONS

1. A. Is there any indication from historical records that sediment transport (including scour and deposition) can affect the 100-year water surface elevations?

☐ Yes ☒ No

B. Based on the conditions (such as geomorphology, vegetative cover and development of the watershed and stream bed, and bank conditions), is there a potential for debris and sediment transport (including scour and deposition) to affect the 100-year water surface elevations and/or the freeboard for the levee/floodwall?

☐ Yes ☒ No

2. If the answer to either 1A or 1B is yes:

A. What is the estimated sediment (bed material) load?

_____cfs (attach gradation curve)

Explain method used to estimate the sediment transport and the depth of scour and/or deposition

_____

_____

_____

_____

_____

B. Will sediment accumulate anywhere along the levee/floodwall (such as along any bends in the channel)?

☐ Yes ☐ No

If yes, what is the minimum freeboard at these locations?_____feet.

## CLOSURES

1. Openings through the levee system:

☒ exist ☐ do not exist

If openings exist, list all closures:

| Channel Station | Left or Right Bank | Opening Type | Highest Elevation for Opening Invert | Type of Closure Device |
|---|---|---|---|---|
| 5.5 | N/A | NOTCH WIER | 5402.74 | NONE |
| | | | | |
| | | | | |

(Extend table on an added sheet as neded and reference)

Geotechnical and geologic data:

In addition to the required detail analysis reports, data obtained during field and laboratory investigations and used in the design analysis should be submitted in a tabulated summary form for the following levee system features . (Reference U.S. Army Corps of Engineers EM-1110-2-1906 Form 2086).

1. The maximum levee slope landside is 3:1

2. The maximum levee slope floodside is 3:1

3. The range of 100-year riverine flood velocities along the levee? 1.01 (min.)
to 0.04 (max.)

4. Embankment material is protected by (describe the kind):
18" GROUTED RIPRAP ($D_{50}$ = 18") 36" THICK

5. Riprap Design Parameters: (Include references) ☒ Velocity; ☐ Tractive stress

| Reach | Sideslope | Flow depth | Velocity | Curve or Straight | Stone Riprap $D_{100}$ | Stone Riprap $D_{50}$ | Stone Riprap Thickness | Depth of Toedown |
|---|---|---|---|---|---|---|---|---|
| Sta 6 to — | 3:1 | 1.17' | 0.04 | STRAIGHT | | 18" | 36" | N/A |
| ta 5 to — | 3:1 | 7.60 | 1.01 | STRAIGHT | | 18" | 36" | N/A |
| Sta ____ to ____ | | | | | | | | |

(Extend table on an added sheet as needed and reference)

6. Has a bedding/filter analysis and design been included ☐ Yes ☒ No

7. Describe the analysis for other kinds of protection used (include copies of the design analysis):

Note: Attach engineering analysis to support construction plans.

1. Identify locations and describe the basis for selection of critical locations for analyses: STATIONS ARE LOCATED U/S AND D/S OF BERM TO MODEL CULVERT FLOWS ADEQUATLY

☐ Overall height: Sta 5.5, height 13 ft.

☐ Limiting foundation soil strength:

Sta 5.5, depth 9ft to 30ft (FROM EMBANKMENT TOP)

strength Ø = 0 degrees, c = 250 psf

☐ slope: SS = 3 (h) to 1 (v)

(Repeat as needed on an added sheet for additional slopes and locations)

2. Specify the embankment stability analyses methodology used (e.g. circular arc, sliding block, infinite slope, etc.): CIRCULAR ARC (BISHOP'S MODIFIED)

3. Summary of stability analysis results:

| Case | Loading Conditions | Critical Safety Factor | Criteria (Min.) |
|---|---|---|---|
| I | End of construction | 1.41 | 1.3 |
| II | Sudden drawdown | N/A | 1.0 |
| III | Critical flood stage | 1.43 | 1.4 |
| IV | Steady seepage at flood stage | N/A | 1.4 |
| VI | Earthquake (Case I) | N/A | 1.0 |

(Reference: U.S. Army Corps of Engineers EM-1110-2-1913 Table 6-1)

4. Was a seepage analysis for the embankment performed? ☐ Yes ☒ No

Describe methodology used:

5. Was a seepage analysis for the foundation performed? ☐ Yes ☒ No

Were uplift pressures at the embankment landside toe checked? ☐ Yes ☒ No

Were seepage exit gradients checked for piping potential? ☐ Yes ☒ No

6. The duration of 100-year flood hydrograph against the embankment is 24 Hrs.

Note: Attach engineering analysis to support construction plans.

K&A
Kumar & Associates, Inc.
Geotechnical & Environmental Engineers

3015 Pennsylvania Avenue
Colorado Springs, CO 80907
(719) 632-7009
Fax 632-1049
E-Mail: kumar@henge.com
www.henge.com/~kumar

Corporate Office – Denver, CO
Branch Office – Ft. Collins, CO

April 30, 1998

Associated Design Professionals, Inc.
1861 Austin Bluffs Parkway, Suite 101
Colorado Springs, Colorado 80918

Attn: Mr. Michael Bartusek, P.E.

Subject: Proposed Detention Embankment, Orchard Avenue Detention Pond, Cañon City, Colorado

Project No. 96-557

Gentlemen:

In accordance with your request, we have prepared this letter to address stability of the embankment slopes for the Orchard Avenue Detention Pond. In order to prepare this letter, we have reviewed our December 18, 1996, report entitled "Geotechnical Engineering Study, Proposed Orchard Detention Pond, Canon City, Colorado," and your April 8, 1998, correspondence, including the sheet entitled "Embankment and Foundation Stability."

It is understood that the embankment was constructed of on-site clay soils with slopes at an inclination of 3 horizontal to 1 vertical on both the pond side and exterior side. The pond side of the embankment was constructed to a maximum height of 13 feet by excavation of approximately 4 feet of soil from the toe of the slope and the placement of approximately 9 feet of fill. The exterior slope was constructed to a maximum height of approximately 9 feet by the placement of fill.

We have performed stability analysis of the proposed embankment slopes. Strength parameters were estimated based on pocket penetrometer testing, index property tests and sampler penetration blow counts. The parameters used for the analysis are presented in the following table:

| Soil Type | Unit Weight (pcf) | Angle of Internal | Cohesion (psf) |
|---|---|---|---|
| Clay Fill | 120 | 0 | 750 |
| Native Clay | 110 | 0 | 250 |

As stability will increase with time, long-term stability was not analyzed. Due to the short detention period, less than 24 hours, it is assumed that the embankment soils, of relatively low hydraulic conductivity, will not become saturated and that pore pressure buildup will not

occur. Therefore, sudden drawdown and steady seepage at flood stage analyses were not required. Analysis was performed for the slopes for end-of-construction conditions, with the pond empty, and for critical flood stage, with the pond full.

The table below indicates the minimum factors of safety determined for the conditions analyzed.

| Case | Loading Condition | Minimum Factor of Safety | Criteria (minimum) |
|---|---|---|---|
| I | End of Construction | 1.41 | 1.3 |
| II | Sudden Drawdown | N/A | 1.0 |
| III | Critical Flood Stage | 1.43 | 1.4 |
| IV | Steady Seepage at | N/A | 1.4 |
| VI | Earthquake (Case I) | N/A | 1.0 |

Based on these results, it is our opinion that the embankment slopes as constructed have adequate factors of safety against deep-seated and surficial failure. We have completed and enclosed the embankment and foundation stability worksheet.

If you have any questions regarding this letter, or if we may be of further service, please contact the undersigned at your convenience.

Sincerely,

KUMAR & ASSOCIATES, INC.

Juan C. Sorensen, P.E.

JCS:fv
Rev. by:BEB
Enclosure

## FLOODWALL AND FOUNDATION STABILITY — N/A

1. Describe analysis submittal based on Code:

   ☐ UBC (1988) or ☐ Other (specify)_____

2. Stability analysis submitted provides for:
   ☐ Overturning; ☐ Sliding; If not, explain_____

   _____

3. Loading included in the analyses were:

   ☐ Lateral earth @ $P_A$ = _____psf; $P_p$ = _____psf

   ☐ Surcharge--Slope @_____, ☐ surface_____psf

   ☐ Wind @ $P_w$ = _____psf

   ☐ Seepage (Uplift) _____ ☐ Earthquake @ $P_{eq}$ = _____%g

   ☐ 100-year significant wave height_____ft.

   ☐ 100-year significant wave period_____sec.

4. Summary of Stability Analysis Results: Factors of Safety. Itemize for each range in site layout dimension and loading condition limitation for each respective reach.

| Loading Condition | Criteria (Min) | | Sta_____ | To_____ | Sta_____ | To_____ |
|---|---|---|---|---|---|---|
| | Overturn | Sliding | Overturn | Sliding | Overturn | Sliding |
| Dead & Wind | 1.5 | 1.5 | | | | |
| Dead & Soil | 1.5 | 1.5 | | | | |
| Dead, Soil, Flood & Impact | 1.5 | 1.5 | | | | |
| Dead, Soil & Seismic | 1.3 | 1.3 | | | | |

(Ref: FEMA 114 Sept 1986; COE EM 1110-2-2502)

(Note: Extend table on an added sheet as needed and reference)

5. Foundation bearing strength for each soil type:

| Bearing Pressure | Sustained Load | Short Term Load |
|---|---|---|
| Computed design maximum | _____psf | _____psf |
| Maximum allowable | _____psf | _____psf |

6. Foundation scour protection ☐ is, ☐ is not provided, (describe)

   _____

Note: Attach engineering analysis to support construction plans.

## SETTLEMENT

1. Anticipated potential settlement has been determined and incorporated into the specified construction elevations to maintain the established freeboard margin.
   ☒ Yes ☐ No
2. The computed range of settlement is 0.25 ft. to 0.5 ft.
3. Settlement of the levee crest is determined to be primarily from:
   - ☐ Foundation consolidation
   - ☒ Embankment compression
   - ☐ Other (describe)_____
4. Differential settlement of floodwalls
   ☐ has ☒ has not been accommodated in the structural design and construction.

Note: Attach engineering analysis to support construction plans.

## INTERIOR DRAINAGE – N/A

1. Specify size of each interior watershed
   - Draining to pressure conduit _____
   - Draining to ponding area _____
2. Relationships Established
   - Ponding elevation vs. storage ☐ Yes ☐ No
   - Ponding elevation vs. gravity flow ☐ Yes ☐ No
   - Differential head vs. gravity flow ☐ Yes ☐ No
3. The river flow duration curve is enclosed ☐ Yes ☐ No
4. Specify the discharge capacity of the head pressure conduit _____
5. Which Flooding Conditions Were Analyzed?
   - Gravity flow (Interior Watershed) ☐ Yes ☐ No
   - Common storm (River Watershed) ☐ Yes ☐ No
   - Historical ponding probability ☐ Yes ☐ No
   - Coastal wave overtopping ☐ Yes ☐ No

   If no, explain why:_____
6. Interior drainage has been analyzed based on joint probability of interior and exterior flooding and the capacities of pumping and outlet facilities to provide the established level of flood protection.
   ☐ Yes ☐ No

   If no, explain why:_____
7. The rate of seepage through the levee system for the 100-year flood is_____cfs

## INTERIOR DRAINAGE (Cont'd) — N/A

1. The length of levee system used to drive this seepage rate is _____ ft.

2. Will a pumping plant(s) be used for interior drainage? ☐ Yes ☐ No

If yes, include the number of pumping plants: _____

| For each pumping plant, list: | Plant #1 | Plant #2 |
|---|---|---|
| The number of pumps | | |
| The ponding storage capacity | | |
| The maximum pumping rate | | |
| The maximum pumping head | | |
| The pumping starting elevation | | |
| The pumping stopping elevation | | |
| Is the discharge facility protected? | | |
| Is there a flood warning plan? | | |
| How much time is available between warning and flooding? | | |

Will the operations be automatic? ☐ Yes ☐ No

If the pumps are electric, are there backup power sources? ☐ Yes ☐ No

(Reference: U.S. Army Corps of Engineers EM-1110-2-3101, 3102, 3103, 3104, and 3105)

Note: Include a copy of supporting documentation of data and analysis. Provide a map showing the flooded area and maximum ponding elevations for all interior watersheds that result in flooding.

## OTHER DESIGN CRITERIA

1. The following items have been addressed as stated:

Liquifaction ☐ is ☒ is not a problem.

Hydrocompaction ☐ is ☒ is not a problem

Heave differential movement due to soils of high shrink/swell ☐ is ☒ is not a problem.

2. For each of these problems, state the basic facts and corrective action taken.

_____

_____

_____

_____

If the levee/floodwall is new or enlarged, will the structure adversely impact flood levels and/or flow velocities floodside of the structure?

☒ Yes ☐ No

Note: Attach supporting documentation

The planned/installed works are in full compliance with NFIP regulations, Section 44 CFR Ch. 1. 65.10

☒ Yes ☐ No

1. The operation plan incorporates all the provisions for closure devices as required in Section 65.10 (c) (1), of the NFIP regulations

☐ Yes ☐ No N/A

2. The operation plan incorporates all the provisions for interior drainage as required in Section 65.10 (c) (2), of the NFIP regulations

☐ Yes ☐ No N/A

If no to either of the above, please explain.

_____

_____

_____

_____

| FEDERAL EMERGENCY MANAGEMENT AGENCY<br>**DAM FORM** | *O.M.B. Burden No. 3067-0148*<br>*Expires July 31, 1997* | FEMA USE ONLY |
|---|---|---|

## PUBLIC BURDEN DISCLOSURE NOTICE

Public reporting burden for this form is estimated to average 0.5 hour per response. The burden estimate includes the time for reviewing instructions, searching existing data sources, gathering and maintaining the needed data, and completing and reviewing the form. Send comments regarding the accuracy of the burden estimate and any suggestions for reducing this burden, to: Information Collections Management, Federal Emergency Management Agency, 500 C Street, S.W., Washington, DC 20472; and to the Office of Management and Budget, Paperwork Reduction Project (3067-0148), Washington, DC 20503.

Community Name: CANON CITY, COLORADO

Flooding Source: NE CANON DRAINAGE AREA (SUB-BASIN FROM NE)

Project Name/Identifier: ORCHARD AVENUE LETTER OF MAP REVISION

### IDENTIFIER

Name of Dam: _____

Location of dam along flood source (in terms of stream distance or cross section identifier):

APPROXIMATELY 35' UPSTREAM OF SECTION 5 AND 853' DOWNSTREAM OF SECTION 6

Check one of the following:

- ☐ Existing dam
- ☒ New dam
- ☐ Modifications of existing dam (describe modifications) _____

Was the dam designed by _____ Federal agency _____ State agency

_____ Local government agency _X_ Private organization?

### BACKGROUND

Does the dam have dedicated flood control storage? ☒ Yes ☐ No

Does the project involve revised hydrology? ☐ Yes ☒ No

If yes, complete Hydrologic Analysis Form and include calculations of the 100-year inflow flood hydrograph routed through the dam with the beginning pool at the normal pool elevation (spillway crest elevation for ungated spillway). Include any inflow hydrograph bulking by watershed sediment yield and provide necessary debris and sediment yield analysis.

Does the revised hydrology affect the 100-year water-surface elevation behind the dam or downstream of the dam? ☒ Yes ☐ No

If yes, complete the Riverine Hydraulic Analysis Form and complete the table shown on the following page.

Stillwater Elevation Behind the Dam

| | FIS | Revised |
|---|---|---|
| 10-year | — | 5399.74 |
| 50-year | — | 5402.19 |
| 100-year | — | 5403.29 |
| 500-year | — | — |
| Normal Pool Elevation | — | N/A |

Was long term sediment accumulation taken into consideration in determining the normal pool elevation? ☐ Yes ☒ No

Was the dam designed to withstand the hydrostatic and hydrodynamic forces associated with floods greater than the 100-year flood? ☒ Yes ☐ No

If no, and the dam has a reasonable probability of failure during the 100-year flood, please attach dam break analysis.

Provide the following data on the dam:

Dimensional Height: 15 ft
Crest Elevation of top of dam: 5407.00
100-year flood storage capacity: 39.7 Ac.Ft
Freeboard (measured from 100-year water surface elevation): 3.7'

Spillway(s):

Type: ☐ gated ☒ ungated

Dimensional Width: 62.6'
Dimensional Height: 10.75'
Crest Elevation of top of spillway: 5402.74

Outlet(s):

Type: ☐ gated ☒ ungated

Width: 26'
Height 14'-8"
Diameter: 42 in.
Invert Elevation: 5388.85

Explain flow regulation plan: THE 100 YR FLOW OF 926 cfs IS REDUCED TO 160 cfs BY RETAINING THE FLOW AND RELEASING IT THROUGH A 42" PIPE.

Are the project features, including the emergency spillway, designed to accommodate the 100-year flood discharge without overtopping the dam? ☐ Yes ☒ No

Was the dam designed in accordance with all currently applicable local, State, and Federal regulations? ☒ Yes ☐ No

If no, please provide explanation.

FEMA may request a list of regulations that have been complied with and supporting documentation demonstrating compliance with these regulations.

Attach copy of formal operation and maintenance plan

Answer N/A to any questions which are not applicable

# SECTION 2

## TR20 Run - Hydrologic Analysis

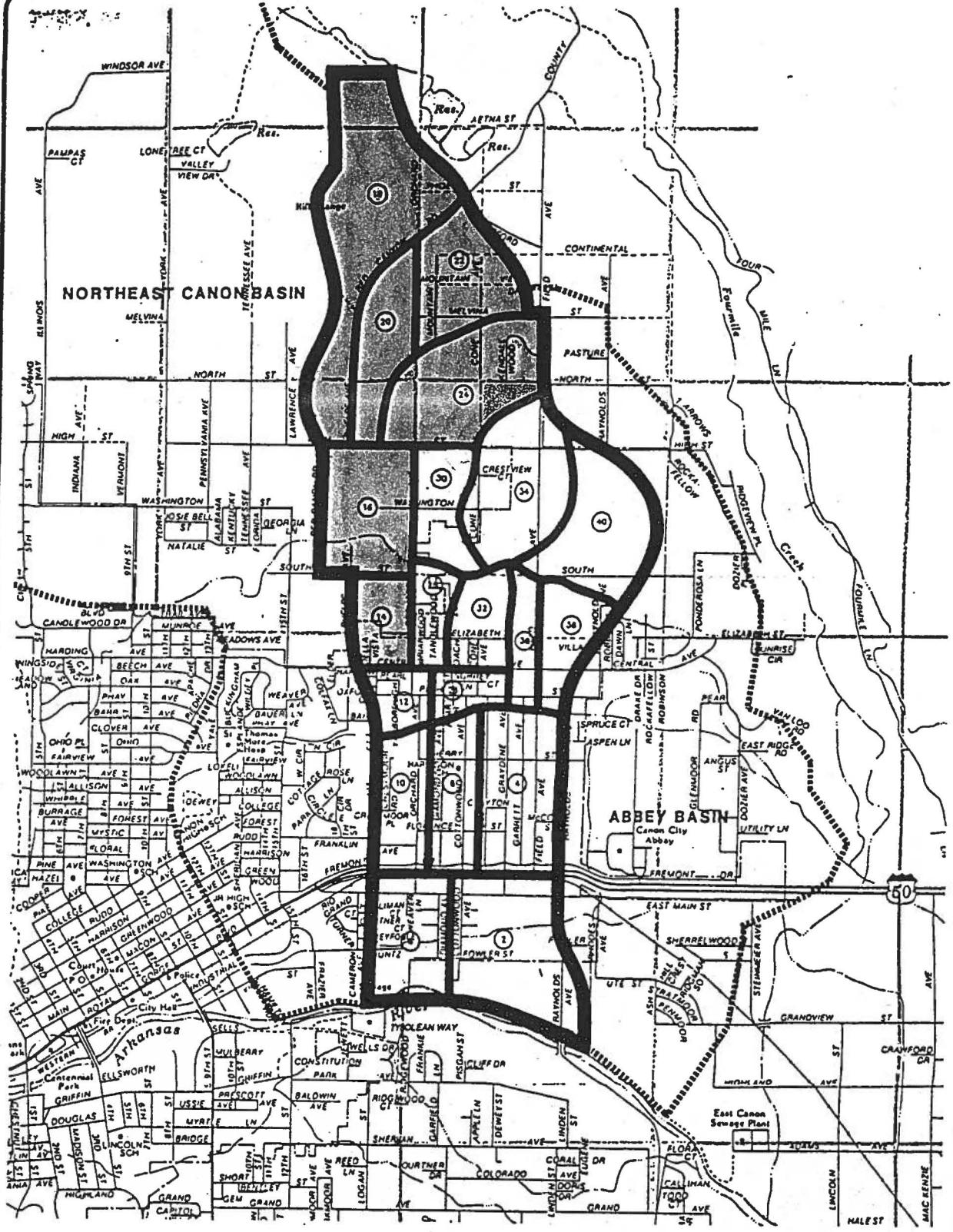


| | |
|---|---|
| ORCHARD AVE. DRAINAGE BASIN PLANNING STUDY | |
| BASIN MAP | |
| DESIGNED BY: MAB | DRAWN BY: JJW |
| CHECKED BY: JRW | DATE: 7/20/94 |
| FILE NO: 941210 | |


PREPARED BY:

GRAEF ANHALT SCHLOEMER and ASSOCIATES
ENGINEERS & SCIENTISTS
102 E. Pikes Peak Ave, Suite 305
Colorado Springs, CO. 80903
(719)634-6902 TEL
(719)634-0660 FAX

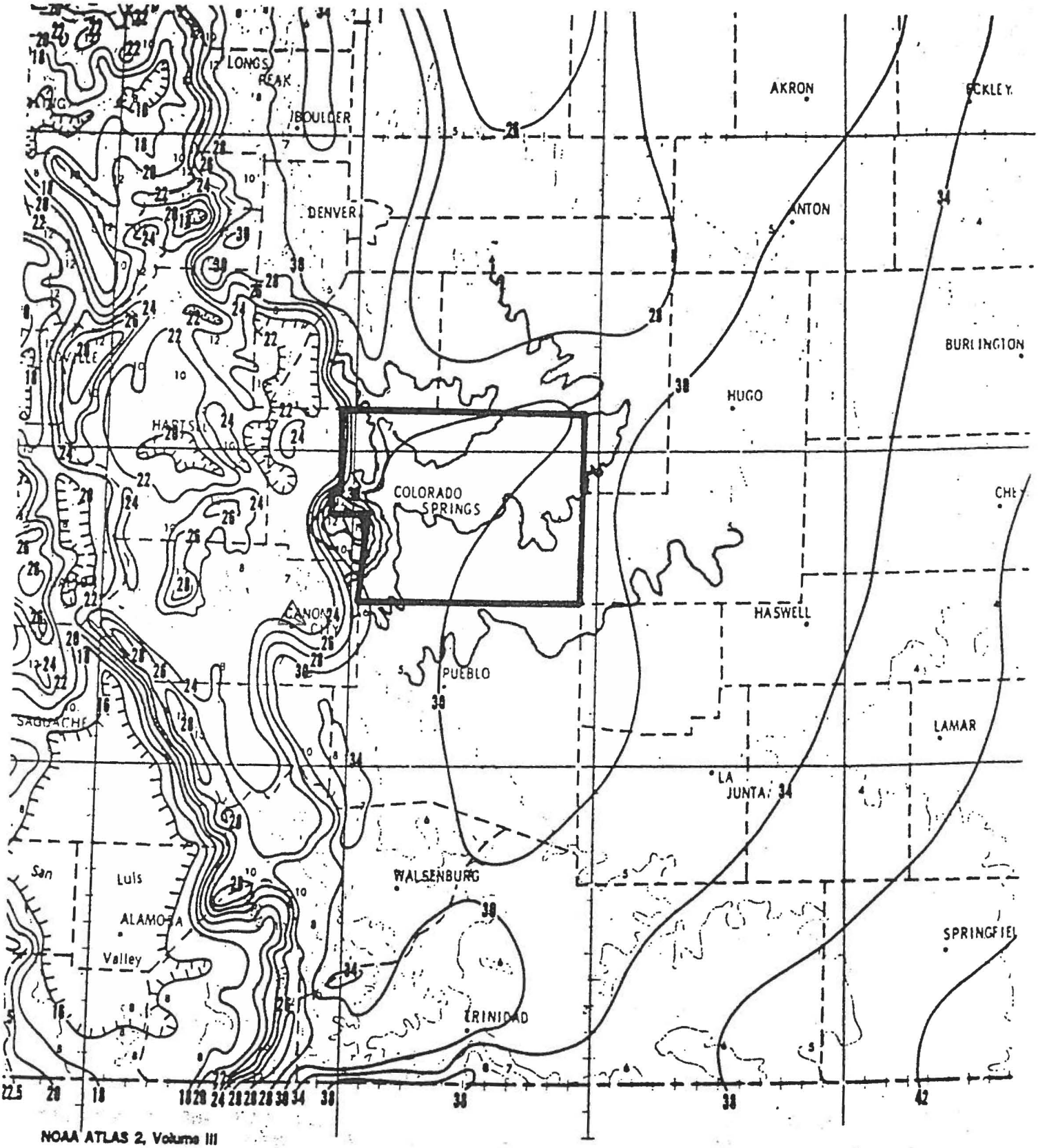


NOAA ATLAS 2, Volume III

Prepared by U.S. Department of Commerce
National Oceanic and Atmospheric Administration
National Weather Service, Office of Hydrology

Prepared for U.S. Department of Agriculture,
Soil Conservation Service, Engineering Division

**ISOPLUVIALS OF 10-YR 24-HR PRECIPITATIO**
**IN TENTHS OF AN INCH**

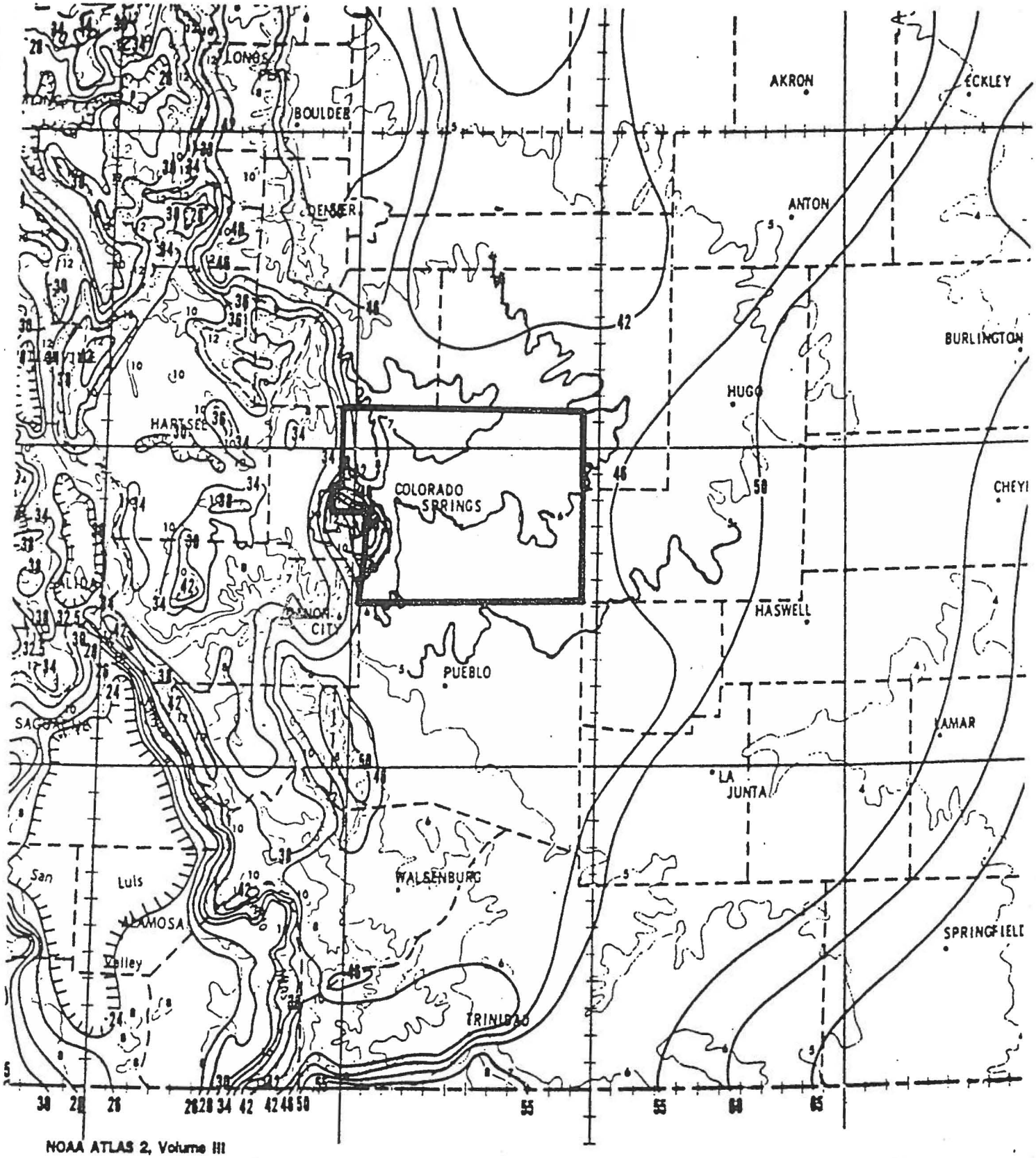


NOAA ATLAS 2, Volume III

Prepared by U.S. Department of Commerce
National Oceanic and Atmospheric Administration
National Weather Service, Office of Hydrology

Prepared for U.S. Department of Agriculture,
Soil Conservation Service, Engineering Division

**ISOPLUVIALS OF 100-YR 24-HR PRECIPITATION IN TENTHS OF AN INCH**

```
**********80-80 LIST OF INPUT DATA FOR TR-20 HYDROLOGY**********

3 TR-20                                          SUMMARY   NOPLOTS
TLE 001  CANON CITY ORCHARD AVE BASIN  TR20 RUN  24 HR. 100 50 10 YR. STORM
ITITLE      EXISTING CONDITIONS W/ DETENTION & TYPE II STORM  INPUT:ORCHDET
 RAINFL 7                0.5
               0.0000    0.0040    0.0080    0.0100    0.0140
 8             0.0190    0.0220    0.0260    0.0300    0.0450
 8             0.0600    0.1000    0.7100    0.7500    0.7750
               0.8000    0.8200    0.8300    0.8400    0.8500
               0.8600    0.8700    0.8750    0.8850    0.8900
 8             0.9000    0.9050    0.9100    0.9200    0.9250
               0.9300    0.9350    0.9400    0.9450    0.9500
               0.9550    0.9600    0.9650    0.9700    0.9730
 8             0.9750    0.9800    0.9830    0.9870    0.9900
               0.9930    0.9960    0.9999    1.0000    1.0000
  ENDTBL
2 XSECTN   014            1.0
 8                      5366.0       0.0       0.0
                        5367.8     100.0      16.80
                        5368.5     200.0      28.09
 8                      5369.7     400.0      55.61
                        5371.0     600.0      93.39
                        5372.6    1500.0     156.94
 9 ENDTBL
2 XSECTN   016            1.0
                        5390.0       0.0       0.0
                        5391.6     100.0      22.68
 8                      5392.2     200.0      37.18
                        5393.5     500.0      72.42
                        5394.9    1000.0     120.73
 8                      5396.7    2000.0     202.01
 9 ENDTBL
2 XSECTN   020            1.0
 8                      5434.0       0.0       0.0
 8                      5435.7     100.0      15.96
                        5436.4     200.0      26.67
                        5437.6     500.0      52.79
 8                      5439.7    1500.0     120.08
 9 ENDTBL
3 STRUCT      05
 8                      5432.0       0.0       0.0
 8                      5434.0      26.0       0.06
 8                      5435.0      44.0       0.23
 8                      5436.0      57.0       0.57
 8                      5437.0      70.0       1.14
 8                      5438.0     395.0       2.17
 9 ENDTBL
1

**********80-80 LIST OF INPUT DATA (CONTINUED)**********

3 STRUCT      06
 8                      5434.0       0.0       0.0
```

```
                    5436.0       14.0        0.06
 8                  5437.0       26.0        0.23
 8                  5438.0      147.0        0.57
                    5439.0      628.0        1.14
 9 ENDTBL
 3 STRUCT      07
                    5450.0        0.0        0.0
                    5451.0        6.0        0.03
 8                  5452.0       13.0        0.09
 8                  5453.0      131.0        0.35
                    5454.0      345.0        0.70
 9 ENDTBL
 3 STRUCT      09
                    5488.0        0.0        0.0
                    5489.0        4.0        0.02
 8                  5490.0        9.0        0.05
                    5491.0       13.0        0.10
                    5492.0      176.0        0.18
 8                  5493.0      470.0        0.30
 9 ENDTBL
   STRUCT      54
 8                  5392.0        0.0        0.0
 8                  5393.0        3.4        0.05
                    5394.0        9.0        0.10
                    5395.0       13.0        0.30
 8                  5396.0       16.0        2.80
 8                  5397.0       78.0        5.80
 8                  5398.0       90.0        9.30
 8                  5399.0      103.0       13.30
 8                  5400.0      112.0       17.70
 8                  5402.0      132.0       29.50
 8                  5403.0      140.0       37.30
 8                  5404.0      210.0       45.70
 8                  5406.0      474.0       64.00
 8                  5407.0      655.0       73.70
 9 ENDTBL
 6 RUNOFF 1 024       6     0.222      83.1        0.449   1
 6 RESVOR 2    07 6   4     5450.0                         1
 6 REACH  3 016   4   5     2900.0
 6 RUNOFF 1 022       7     0.121      81.0        0.337   1
 6 RESVOR 2    09 7   4     5488.0                         1
 6 REACH  3 020   4   6     2700.0
 6 RUNOFF 1 020       4     0.127      80.0        0.513   1
 6 ADDHYD 4 020   4 6 7                                    1


**********80-80 LIST OF INPUT DATA (CONTINUED)**********

 6 RESVOR 2    06 7   2     5434.0                         1
 6 RUNOFF 1 018       4     0.427      77.2        0.611   1
 6 RESVOR 2    05 4   7     5432.0                         1
 6 REACH  3 016   7   6     2900.0                         1
 6 ADDHYD 4 016   5 6 4                                    1
 6 RUNOFF 1 016       5     0.188      81.7        0.548   1
 6 ADDHYD 4 016   5 2 6                                    1
 6 ADDHYD 4 016   6 4 5                                    1 1   1
 6 RESVOR 2    54 5   6     5392.0                         1 1   1
 6 REACH  3 014   6   7     2300.0                         1
```

```
  RUNOFF 1 014       5     0.092      87.5         0.336   1
6 ADDHYD 4 014   7 5 6                                    1 1   1
  ENDATA
  INCREM 6                 0.10
7 COMPUT 7 024   014       0.0          3.40        1.0    7 2  01  01
  ENDCMP 1
  INCREM 6                 0.10
  COMPUT 7 024   014       0.0          3.05        1.0    7 2  01  02
  ENDCMP 1
7 INCREM 6                 0.10
  COMPUT 7 024   014       0.0          2.40        1.0    7 2  01  03
  ENDCMP 1
  ENDJOB 2
*******************************END OF 80-80 LIST*********************************
```

ECUTIVE CONTROL OPERATION INCREM RECORD ID

MAIN TIME INCREMENT = .10 HOURS

ECUTIVE CONTROL OPERATION COMPUT RECORD ID

FROM XSECTION 24

TO XSECTION 14

STARTING TIME = .00 RAIN DEPTH = 3.40 RAIN DURATION= 1.00 RAIN TABLE NO.= 7 ANT. MOIST. COND= 2

ALTERNATE NO.= 1 STORM NO.= 1 MAIN TIME INCREMENT = .10 HOURS

ERATION RUNOFF CROSS SECTION 24

| PEAK TIME(HRS) | PEAK DISCHARGE(CFS) | PEAK ELEVATION(FEET) |
|---|---|---|
| 6.13 | 274.90 | (RUNOFF) |
| 10.39 | 7.79 | (RUNOFF) |
| 11.57 | 7.28 | (RUNOFF) |
| 12.57 | 7.30 | (RUNOFF) |
| 14.07 | 7.32 | (RUNOFF) |
| 18.87 | 4.03 | (RUNOFF) |
| 20.59 | 3.71 | (RUNOFF) |
| 23.50 | 3.02 | (RUNOFF) |

PERATION RESVOR STRUCTURE 7

| PEAK TIME(HRS) | PEAK DISCHARGE(CFS) | PEAK ELEVATION(FEET) |
|---|---|---|
| 6.16 | 271.90 | 5453.66 |
| 10.45 | 7.79 | 5451.26 |
| 11.65 | 7.05 | 5451.15 |
| 12.66 | 7.08 | 5451.15 |
| 14.16 | 7.09 | 5451.16 |
| 18.90 | 4.03 | 5450.67 |
| 23.56 | 3.00 | 5450.50 |

*** WARNING REACH 16 ATT-KIN COEFF.(C) GREATER THAN 0.667, CONSIDER REDUCING MAIN TIME INCREMENT ***

PERATION RUNOFF CROSS SECTION 22

| PEAK TIME(HRS) | PEAK DISCHARGE(CFS) | PEAK ELEVATION(FEET) |
|---|---|---|
| 6.08 | 156.29 | (RUNOFF) |
| 7.46 | 9.76 | (RUNOFF) |
| 10.40 | 4.04 | (RUNOFF) |

| | | |
|---|---|---|
| 11.52 | 3.92 | (RUNOFF) |
| 12.51 | 3.94 | (RUNOFF) |
| 14.01 | 3.97 | (RUNOFF) |
| 18.90 | 2.10 | (RUNOFF) |
| 23.47 | 1.64 | (RUNOFF) |



OPERATION RESVOR STRUCTURE 9

| PEAK TIME(HRS) | PEAK DISCHARGE(CFS) | PEAK ELEVATION(FEET) |
|---|---|---|
| 6.09 | 159.97 | 5491.90 |
| 10.45 | 4.05 | 5489.01 |
| 11.57 | 3.89 | 5488.97 |
| 12.57 | 3.90 | 5488.98 |
| 14.07 | 3.93 | 5488.98 |
| 18.95 | 2.11 | 5488.53 |
| 23.51 | 1.61 | 5488.40 |

*** WARNING REACH 20 ATT-KIN COEFF.(C) GREATER THAN 0.667, CONSIDER REDUCING MAIN TIME INCREMENT ***

OPERATION RUNOFF CROSS SECTION 20

| PEAK TIME(HRS) | PEAK DISCHARGE(CFS) | PEAK ELEVATION(FEET) |
|---|---|---|
| 6.18 | 122.98 | (RUNOFF) |
| 10.40 | 4.13 | (RUNOFF) |
| 11.60 | 3.77 | (RUNOFF) |
| 12.60 | 3.80 | (RUNOFF) |
| 14.10 | 3.80 | (RUNOFF) |
| 18.89 | 2.16 | (RUNOFF) |
| 23.53 | 1.60 | (RUNOFF) |

ERATION ADDHYD CROSS SECTION 20

| PEAK TIME(HRS) | PEAK DISCHARGE(CFS) | PEAK ELEVATION(FEET) |
|---|---|---|
| 6.20 | 273.60 | 5436.69 |
| 10.44 | 8.17 | 5434.14 |
| 11.65 | 7.56 | 5434.13 |
| 12.65 | 7.59 | 5434.13 |
| 14.15 | 7.62 | 5434.13 |
| 18.93 | 4.26 | 5434.07 |
| 20.67 | 3.88 | 5434.07 |
| 23.57 | 3.18 | 5434.05 |

ERATION RESVOR STRUCTURE 6

| PEAK TIME(HRS) | PEAK DISCHARGE(CFS) | PEAK ELEVATION(FEET) |
|---|---|---|
| 6.21 | 266.23 | 5438.25 |
| 10.46 | 8.17 | 5435.17 |
| 11.70 | 7.48 | 5435.07 |
| 12.70 | 7.52 | 5435.07 |
| 14.20 | 7.55 | 5435.08 |
| 18.95 | 4.26 | 5434.61 |
| 20.73 | 3.85 | 5434.55 |
| 23.61 | 3.14 | 5434.45 |

OPERATION RUNOFF CROSS SECTION 18

| PEAK TIME(HRS) | PEAK DISCHARGE(CFS) | PEAK ELEVATION(FEET) |
|---|---|---|
| 6.24 | 315.71 | (RUNOFF) |
| 10.45 | 12.89 | (RUNOFF) |
| 11.65 | 11.40 | (RUNOFF) |
| 12.65 | 11.47 | (RUNOFF) |
| 14.15 | 11.46 | (RUNOFF) |
| 18.89 | 6.80 | (RUNOFF) |
| 20.69 | 5.86 | (RUNOFF) |
| 21.64 | 5.18 | (RUNOFF) |
| 23.56 | 4.92 | (RUNOFF) |

*** WARNING - STRUCTURE 5 DELTA T IS TOO LARGE. O /2 > S /DELTA T OCCURED 3 TIMES STARTING WITH POINT256

OPERATION RESVOR STRUCTURE 5

| PEAK TIME(HRS) | PEAK DISCHARGE(CFS) | PEAK ELEVATION(FEET) |
|---|---|---|
| 6.28 | 310.42 | 5437.74 |
| 10.46 | 12.88 | 5432.99 |
| 11.68 | 11.38 | 5432.88 |
| 12.68 | 11.44 | 5432.88 |
| 14.19 | 11.44 | 5432.88 |
| 18.92 | 6.79 | 5432.52 |
| 20.72 | 5.85 | 5432.45 |
| 21.67 | 5.17 | 5432.40 |
| 23.58 | 4.90 | 5432.38 |

*** WARNING REACH 16 ATT-KIN COEFF.(C) GREATER THAN 0.667, CONSIDER REDUCING MAIN TIME INCREMENT ***

OPERATION REACH CROSS SECTION 16



| PEAK TIME(HRS) | PEAK DISCHARGE(CFS) | PEAK ELEVATION(FEET) |
|---|---|---|
| 6.43 | 294.16 | 5392.61 |
| 10.57 | 12.87 | 5390.21 |

| | | |
|---|---|---|
| 11.81 | 11.21 | 5390.18 |
| 12.82 | 11.27 | 5390.18 |
| 14.32 | 11.25 | 5390.18 |
| 19.05 | 6.79 | 5390.11 |
| 20.86 | 5.74 | 5390.09 |
| 23.70 | 4.84 | 5390.08 |

)PERATION ADDHYD CROSS SECTION 16

| PEAK TIME(HRS) | PEAK DISCHARGE(CFS) | PEAK ELEVATION(FEET) |
|---|---|---|
| 6.37 | 522.85 | 5393.56 |
| 10.56 | 20.66 | 5390.33 |
| 11.80 | 18.14 | 5390.29 |
| 12.81 | 18.22 | 5390.29 |
| 14.31 | 18.20 | 5390.29 |
| 19.03 | 10.82 | 5390.17 |
| 20.84 | 9.30 | 5390.15 |
| 21.78 | 8.21 | 5390.13 |
| 23.69 | 7.79 | 5390.12 |

OPERATION RUNOFF CROSS SECTION 16

| PEAK TIME(HRS) | PEAK DISCHARGE(CFS) | PEAK ELEVATION(FEET) |
|---|---|---|
| 6.20 | 192.79 | (RUNOFF) |
| 10.40 | 6.38 | (RUNOFF) |
| 11.62 | 5.75 | (RUNOFF) |
| 12.62 | 5.78 | (RUNOFF) |
| 14.12 | 5.78 | (RUNOFF) |
| 18.95 | 3.32 | (RUNOFF) |
| 23.55 | 2.43 | (RUNOFF) |

'ERATION ADDHYD CROSS SECTION 16



| PEAK TIME(HRS) | PEAK DISCHARGE(CFS) | PEAK ELEVATION(FEET) |
|---|---|---|
| 6.21 | 458.66 | 5393.32 |
| 10.44 | 14.55 | 5390.23 |
| 11.66 | 13.16 | 5390.21 |
| 12.66 | 13.24 | 5390.21 |
| 14.17 | 13.25 | 5390.21 |
| 18.95 | 7.59 | 5390.12 |
| 20.70 | 6.74 | 5390.11 |
| 21.66 | 5.81 | 5390.09 |
| 23.57 | 5.57 | 5390.09 |

OPERATION ADDHYD CROSS SECTION 16

| PEAK TIME(HRS) | PEAK DISCHARGE(CFS) | PEAK ELEVATION(FEET) |
|---|---|---|
| 6.30 | 926.33 | 5394.69 |

| | | |
|---|---|---|
| 10.47 | 35.19 | 5390.56 |
| 11.74 | 30.84 | 5390.49 |
| 12.74 | 30.98 | 5390.50 |
| 14.25 | 30.94 | 5390.50 |
| 18.96 | 18.41 | 5390.29 |
| 20.78 | 15.82 | 5390.25 |
| 21.72 | 13.95 | 5390.22 |
| 23.63 | 13.19 | 5390.21 |

| TIME(HRS) | | FIRST HYDROGRAPH POINT = .00 HOURS | | | | TIME INCREMENT = .10 HOURS | | | DRAINAGE AREA = | | 1.09 SQ.MI. |
|---|---|---|---|---|---|---|---|---|---|---|---|
| 5.00 | DISCHG | .00 | .00 | .00 | .00 | .00 | .04 | 1.50 | 12.63 | 57.29 | 168.52 |
| 6.00 | DISCHG | 396.29 | 631.63 | 845.32 | 926.13 | 828.35 | 675.51 | 521.60 | 392.76 | 295.74 | 227.82 |
| 7.00 | DISCHG | 179.88 | 152.16 | 138.37 | 128.58 | 120.85 | 113.75 | 107.04 | 101.20 | 93.66 | 86.87 |
| 8.00 | DISCHG | 81.50 | 77.22 | 73.26 | 68.61 | 62.01 | 54.93 | 48.25 | 43.75 | 40.58 | 38.47 |
| 9.00 | DISCHG | 37.12 | 36.27 | 35.73 | 35.40 | 35.20 | 35.09 | 35.03 | 35.00 | 35.00 | 35.02 |
| 10.00 | DISCHG | 35.04 | 35.06 | 35.10 | 35.13 | 35.16 | 35.18 | 35.07 | 34.46 | 32.91 | 30.35 |
| 11.00 | DISCHG | 27.30 | 24.41 | 22.82 | 22.94 | 24.66 | 27.20 | 29.45 | 30.74 | 30.54 | 28.87 |
| 12.00 | DISCHG | 26.37 | 23.90 | 22.54 | 22.85 | 24.67 | 27.29 | 29.57 | 30.87 | 30.70 | 29.05 |
| 13.00 | DISCHG | 26.53 | 23.89 | 21.86 | 20.46 | 19.57 | 19.01 | 18.81 | 19.26 | 20.79 | 23.45 |
| 14.00 | DISCHG | 26.60 | 29.24 | 30.76 | 30.72 | 29.14 | 26.67 | 24.02 | 22.00 | 20.62 | 19.72 |
| 15.00 | DISCHG | 19.15 | 18.79 | 18.56 | 18.41 | 18.32 | 18.27 | 18.23 | 18.21 | 18.20 | 18.20 |
| 16.00 | DISCHG | 18.20 | 18.20 | 18.21 | 18.21 | 18.22 | 18.23 | 18.24 | 18.24 | 18.25 | 18.26 |
| 17.00 | DISCHG | 18.26 | 18.27 | 18.28 | 18.29 | 18.29 | 18.30 | 18.31 | 18.31 | 18.32 | 18.33 |
| 18.00 | DISCHG | 18.34 | 18.34 | 18.35 | 18.36 | 18.36 | 18.37 | 18.38 | 18.38 | 18.39 | 18.40 |
| 19.00 | DISCHG | 18.40 | 18.34 | 18.08 | 17.39 | 16.27 | 14.95 | 13.72 | 12.67 | 11.70 | 10.73 |
| 20.00 | DISCHG | 9.81 | 9.13 | 8.99 | 9.63 | 11.07 | 12.90 | 14.55 | 15.57 | 15.80 | 15.27 |
| 21.00 | DISCHG | 14.33 | 13.41 | 12.78 | 12.60 | 12.82 | 13.27 | 13.70 | 13.94 | 13.85 | 13.45 |
| 22.00 | DISCHG | 12.90 | 12.36 | 11.95 | 11.66 | 11.48 | 11.36 | 11.28 | 11.24 | 11.21 | 11.19 |
| 23.00 | DISCHG | 11.18 | 11.20 | 11.33 | 11.64 | 12.15 | 12.74 | 13.17 | 13.04 | 12.02 | 10.06 |
| 24.00 | DISCHG | 7.64 | 5.41 | 3.69 | 2.47 | 1.64 | 1.08 | .70 | .45 | .28 | .18 |
| 25.00 | DISCHG | .10 | .06 | .04 | .02 | .01 | .00 | | | | |



RUNOFF VOLUME ABOVE BASEFLOW = 1.56 WATERSHED INCHES, 1089.83 CFS-HRS, 90.06 ACRE-FEET; BASEFLOW = .00 CFS

OPERATION RESVOR STRUCTURE 54

| PEAK TIME(HRS) | PEAK DISCHARGE(CFS) | PEAK ELEVATION(FEET) |
|---|---|---|
| 7.08 | 160.19 | 5403.29 |
| 14.36 | 29.80 | 5396.22 |
| 19.05 | 18.37 | 5396.04 |
| 20.82 | 15.58 | 5395.86 |

| TIME(HRS) | | FIRST HYDROGRAPH POINT = .00 HOURS | | | | TIME INCREMENT = .10 HOURS | | | DRAINAGE AREA = | | 1.09 SQ.MI. |
|---|---|---|---|---|---|---|---|---|---|---|---|
| 5.00 | DISCHG | .00 | .00 | .00 | .00 | .00 | .01 | .34 | 3.29 | 12.45 | 13.96 |
| 6.00 | DISCHG | 25.64 | 82.35 | 100.13 | 113.95 | 124.57 | 132.79 | 136.72 | 139.42 | 149.09 | 156.59 |
| 7.00 | DISCHG | 159.74 | 160.16 | 159.17 | 157.46 | 155.28 | 152.75 | 149.93 | 146.88 | 143.59 | 140.04 |
| 8.00 | DISCHG | 139.53 | 139.03 | 138.49 | 137.92 | 137.30 | 136.64 | 135.92 | 135.16 | 134.38 | 133.58 |
| 9.00 | DISCHG | 132.77 | 131.93 | 130.59 | 129.27 | 127.97 | 126.67 | 125.40 | 124.14 | 122.90 | 121.68 |
| 10.00 | DISCHG | 120.47 | 119.29 | 118.11 | 116.96 | 115.82 | 114.70 | 113.59 | 112.50 | 111.28 | 109.94 |
| 11.00 | DISCHG | 108.58 | 107.20 | 105.79 | 104.40 | 103.05 | 101.04 | 99.11 | 97.28 | 95.52 | 93.77 |
| 12.00 | DISCHG | 92.02 | 90.25 | 88.39 | 86.55 | 84.80 | 83.16 | 81.63 | 80.19 | 78.81 | 74.86 |

| | | | | | | | | | | | |
|---|---|---|---|---|---|---|---|---|---|---|---|
| 3.00 | DISCHG | 67.45 | 60.81 | 54.84 | 49.54 | 44.89 | 40.86 | 37.41 | 34.52 | 32.24 | 30.65 |
| 14.00 | DISCHG | 29.76 | 29.47 | 29.55 | 29.74 | 29.77 | 29.48 | 28.83 | 27.91 | 26.87 | 25.82 |
| 15.00 | DISCHG | 24.81 | 23.89 | 23.07 | 22.35 | 21.72 | 21.18 | 20.72 | 20.33 | 19.99 | 19.71 |
| 6.00 | DISCHG | 19.47 | 19.27 | 19.11 | 18.96 | 18.85 | 18.75 | 18.67 | 18.60 | 18.54 | 18.50 |
| 7.00 | DISCHG | 18.46 | 18.43 | 18.41 | 18.39 | 18.37 | 18.36 | 18.35 | 18.34 | 18.34 | 18.34 |
| 18.00 | DISCHG | 18.34 | 18.34 | 18.34 | 18.34 | 18.34 | 18.35 | 18.35 | 18.36 | 18.36 | 18.37 |
| 9.00 | DISCHG | 18.37 | 18.37 | 18.35 | 18.25 | 18.03 | 17.65 | 17.13 | 16.51 | 15.99 | 15.94 |
| 0.00 | DISCHG | 15.89 | 15.82 | 15.76 | 15.69 | 15.64 | 15.60 | 15.59 | 15.58 | 15.58 | 15.58 |
| 21.00 | DISCHG | 15.57 | 15.56 | 15.53 | 15.50 | 15.48 | 15.45 | 15.43 | 15.42 | 15.40 | 15.38 |
| 22.00 | DISCHG | 15.36 | 15.34 | 15.30 | 15.27 | 15.23 | 15.20 | 15.16 | 15.12 | 15.08 | 15.04 |
| 3.00 | DISCHG | 15.00 | 14.97 | 14.93 | 14.90 | 14.87 | 14.84 | 14.82 | 14.81 | 14.78 | 14.75 |
| 24.00 | DISCHG | 14.69 | 14.61 | 14.51 | 14.40 | 14.27 | 14.15 | 14.02 | 13.88 | 13.75 | 13.62 |
| 25.00 | DISCHG | 13.48 | 13.35 | 13.22 | 13.09 | 12.40 | 10.51 | 8.60 | 3.23 | 1.81 | 1.02 |
| 6.00 | DISCHG | .57 | .32 | .18 | .10 | .06 | .03 | .02 | .01 | .01 | .00 |

RUNOFF VOLUME ABOVE BASEFLOW = 1.56 WATERSHED INCHES, 1090.54 CFS-HRS, 90.12 ACRE-FEET; BASEFLOW = .00 CFS

*** WARNING REACH 14 ATT-KIN COEFF.(C) GREATER THAN 0.667, CONSIDER REDUCING MAIN TIME INCREMENT ***

ERATION REACH CROSS SECTION 14

| PEAK TIME(HRS) | PEAK DISCHARGE(CFS) | PEAK ELEVATION(FEET) |
|---|---|---|
| 7.21 | 159.96 | 5368.22 |
| 14.47 | 29.77 | 5366.54 |
| 19.15 | 18.37 | 5366.33 |



OPERATION RUNOFF CROSS SECTION 14

| PEAK TIME(HRS) | PEAK DISCHARGE(CFS) | PEAK ELEVATION(FEET) |
|---|---|---|
| 6.07 | 160.16 | (RUNOFF) |
| 10.38 | 3.54 | (RUNOFF) |
| 11.51 | 3.42 | (RUNOFF) |
| 12.51 | 3.43 | (RUNOFF) |
| 14.01 | 3.44 | (RUNOFF) |
| 18.88 | 1.81 | (RUNOFF) |
| 23.47 | 1.39 | (RUNOFF) |

ERATION ADDHYD CROSS SECTION 14

| PEAK TIME(HRS) | PEAK DISCHARGE(CFS) | PEAK ELEVATION(FEET) |
|---|---|---|
| 6.18 | 191.83 | 5368.44 |
| 7.21 | 168.67 | 5368.28 |
| 18.96 | 20.18 | 5366.36 |
| 23.42 | 16.27 | 5366.29 |

TIME(HRS) FIRST HYDROGRAPH POINT = .00 HOURS TIME INCREMENT = .10 HOURS DRAINAGE AREA = 1.18 SQ.MI.

| | | | | | | | | | | | |
|---|---|---|---|---|---|---|---|---|---|---|---|
| 5.00 | DISCHG | .00 | .00 | .00 | .00 | .02 | .21 | 4.78 | 29.64 | 74.69 | 126.11 |
| 6.00 | DISCHG | 162.83 | 181.21 | 190.89 | 164.77 | 150.87 | 148.63 | 150.41 | 150.49 | 150.40 | 157.27 |
| 7.00 | DISCHG | 164.15 | 167.74 | 168.67 | 167.98 | 166.44 | 164.37 | 161.77 | 158.54 | 155.03 | 151.50 |

| | | | | | | | | | | | |
|---|---|---|---|---|---|---|---|---|---|---|---|
| 8.00 | DISCHG | 147.85 | 146.48 | 144.88 | 143.28 | 142.10 | 141.20 | 140.40 | 139.63 | 138.85 | 138.06 |
| 9.00 | DISCHG | 137.26 | 136.45 | 135.62 | 134.37 | 133.06 | 131.76 | 130.46 | 129.19 | 127.93 | 126.69 |
| 10.00 | DISCHG | 125.46 | 124.25 | 123.06 | 121.89 | 120.74 | 119.59 | 118.31 | 116.71 | 115.08 | 113.58 |
| 11.00 | DISCHG | 112.12 | 110.86 | 109.94 | 109.05 | 107.96 | 106.74 | 104.77 | 102.38 | 100.02 | 97.94 |
| 12.00 | DISCHG | 96.05 | 94.37 | 93.08 | 91.75 | 90.22 | 88.59 | 86.85 | 84.82 | 82.85 | 81.15 |
| 13.00 | DISCHG | 77.50 | 70.68 | 63.98 | 57.88 | 52.44 | 47.66 | 43.67 | 40.59 | 38.12 | 36.02 |
| 14.00 | DISCHG | 34.43 | 33.32 | 32.44 | 31.93 | 31.78 | 31.69 | 31.38 | 30.77 | 29.89 | 28.88 |
| 15.00 | DISCHG | 27.83 | 26.81 | 25.88 | 25.04 | 24.30 | 23.65 | 23.09 | 22.62 | 22.21 | 21.86 |
| 16.00 | DISCHG | 21.57 | 21.32 | 21.11 | 20.94 | 20.79 | 20.67 | 20.57 | 20.48 | 20.41 | 20.36 |
| 17.00 | DISCHG | 20.31 | 20.27 | 20.24 | 20.21 | 20.19 | 20.18 | 20.16 | 20.16 | 20.15 | 20.14 |
| 18.00 | DISCHG | 20.14 | 20.14 | 20.14 | 20.14 | 20.14 | 20.15 | 20.15 | 20.16 | 20.16 | 20.17 |
| 19.00 | DISCHG | 20.17 | 20.11 | 19.91 | 19.67 | 19.46 | 19.21 | 18.80 | 18.19 | 17.48 | 16.88 |
| 20.00 | DISCHG | 16.72 | 16.74 | 16.97 | 17.22 | 17.34 | 17.38 | 17.32 | 17.11 | 16.90 | 16.78 |
| 21.00 | DISCHG | 16.72 | 16.72 | 16.79 | 16.87 | 16.90 | 16.90 | 16.86 | 16.75 | 16.63 | 16.55 |
| 22.00 | DISCHG | 16.50 | 16.47 | 16.43 | 16.40 | 16.37 | 16.33 | 16.29 | 16.25 | 16.22 | 16.18 |
| 23.00 | DISCHG | 16.14 | 16.13 | 16.18 | 16.25 | 16.27 | 16.26 | 16.13 | 15.73 | 15.30 | 15.04 |
| 24.00 | DISCHG | 14.90 | 14.78 | 14.67 | 14.55 | 14.43 | 14.30 | 14.17 | 14.04 | 13.91 | 13.78 |
| 25.00 | DISCHG | 13.64 | 13.51 | 13.38 | 13.25 | 13.12 | 12.52 | 10.85 | 8.98 | 4.21 | 2.22 |
| 26.00 | DISCHG | 1.22 | .68 | .38 | .21 | .12 | .07 | .04 | .02 | .01 | .01 |
| 27.00 | DISCHG | .00 | | | | | | | | | |

RUNOFF VOLUME ABOVE BASEFLOW = 1.60 WATERSHED INCHES, 1216.61 CFS-HRS, 100.54 ACRE-FEET; BASEFLOW = .00 CFS



EXECUTIVE CONTROL OPERATION ENDCMP RECORD ID

COMPUTATIONS COMPLETED FOR PASS 1

EXECUTIVE CONTROL OPERATION INCREM RECORD ID

MAIN TIME INCREMENT = .10 HOURS

EXECUTIVE CONTROL OPERATION COMPUT RECORD ID

FROM XSECTION 24

TO XSECTION 14

STARTING TIME = .00 RAIN DEPTH = 3.05 RAIN DURATION= 1.00 RAIN TABLE NO.= 7 ANT. MOIST. COND= 2
ALTERNATE NO.= 1 STORM NO.= 2 MAIN TIME INCREMENT = .10 HOURS

OPERATION RUNOFF CROSS SECTION 24

| PEAK TIME(HRS) | PEAK DISCHARGE(CFS) | PEAK ELEVATION(FEET) |
|---|---|---|
| 6.14 | 227.85 | (RUNOFF) |
| 10.40 | 6.73 | (RUNOFF) |
| 11.57 | 6.30 | (RUNOFF) |
| 12.57 | 6.32 | (RUNOFF) |
| 14.07 | 6.35 | (RUNOFF) |
| 18.87 | 3.50 | (RUNOFF) |
| 23.50 | 2.63 | (RUNOFF) |

OPERATION RESVOR STRUCTURE 7

| PEAK TIME(HRS) | PEAK DISCHARGE(CFS) | PEAK ELEVATION(FEET) |
|---|---|---|
| 6.16 | 225.39 | 5453.44 |
| 10.45 | 6.74 | 5451.10 |
| 11.64 | 6.16 | 5451.02 |
| 12.64 | 6.18 | 5451.03 |
| 14.14 | 6.20 | 5451.03 |
| 18.90 | 3.50 | 5450.58 |
| 23.56 | 2.61 | 5450.44 |

'ERATION RUNOFF CROSS SECTION 22



| PEAK TIME(HRS) | PEAK DISCHARGE(CFS) | PEAK ELEVATION(FEET) |
|---|---|---|
| 6.09 | 128.76 | (RUNOFF) |
| 7.46 | 8.33 | (RUNOFF) |
| 10.41 | 3.47 | (RUNOFF) |
| 11.52 | 3.37 | (RUNOFF) |
| 12.51 | 3.39 | (RUNOFF) |
| 14.01 | 3.42 | (RUNOFF) |
| 18.90 | 1.82 | (RUNOFF) |
| 23.47 | 1.41 | (RUNOFF) |

PERATION RESVOR STRUCTURE 9

| PEAK TIME(HRS) | PEAK DISCHARGE(CFS) | PEAK ELEVATION(FEET) |
|---|---|---|
| 6.10 | 134.70 | 5491.75 |
| 10.45 | 3.48 | 5488.87 |
| 11.57 | 3.34 | 5488.83 |
| 12.57 | 3.36 | 5488.84 |
| 14.07 | 3.38 | 5488.85 |
| 18.95 | 1.82 | 5488.46 |
| 23.51 | 1.39 | 5488.35 |

*** WARNING REACH 20 ATT-KIN COEFF.(C) GREATER THAN 0.667, CONSIDER REDUCING MAIN TIME INCREMENT ***

OPERATION RUNOFF CROSS SECTION 20

| PEAK TIME(HRS) | PEAK DISCHARGE(CFS) | PEAK ELEVATION(FEET) |
|---|---|---|
| 6.19 | 100.03 | (RUNOFF) |
| 10.41 | 3.53 | (RUNOFF) |
| 11.60 | 3.23 | (RUNOFF) |
| 12.60 | 3.25 | (RUNOFF) |
| 14.10 | 3.26 | (RUNOFF) |
| 23.53 | 1.37 | (RUNOFF) |

OPERATION ADDHYD CROSS SECTION 20

| PEAK TIME(HRS) | PEAK DISCHARGE(CFS) | PEAK ELEVATION(FEET) |
|---|---|---|
| 6.21 | 224.54 | 5436.50 |
| 10.45 | 7.00 | 5434.12 |
| 11.65 | 6.47 | 5434.11 |
| 12.65 | 6.50 | 5434.11 |
| 14.15 | 6.54 | 5434.11 |
| 18.94 | 3.67 | 5434.06 |
| 23.57 | 2.74 | 5434.05 |



OPERATION RESVOR STRUCTURE 6

| PEAK TIME(HRS) | PEAK DISCHARGE(CFS) | PEAK ELEVATION(FEET) |
|---|---|---|
| 6.22 | 221.90 | 5438.16 |
| 10.46 | 7.00 | 5435.00 |
| 11.70 | 6.41 | 5434.92 |
| 12.70 | 6.45 | 5434.92 |
| 14.20 | 6.48 | 5434.93 |
| 18.96 | 3.68 | 5434.52 |
| 23.61 | 2.71 | 5434.39 |

OPERATION RUNOFF CROSS SECTION 18

| PEAK TIME(HRS) | PEAK DISCHARGE(CFS) | PEAK ELEVATION(FEET) |
|---|---|---|
| 6.25 | 251.34 | (RUNOFF) |
| 10.45 | 10.91 | (RUNOFF) |
| 11.65 | 9.66 | (RUNOFF) |
| 12.65 | 9.73 | (RUNOFF) |
| 14.15 | 9.74 | (RUNOFF) |
| 18.90 | 5.79 | (RUNOFF) |
| 20.69 | 5.00 | (RUNOFF) |
| 23.56 | 4.20 | (RUNOFF) |

*** WARNING - STRUCTURE 5 DELTA T IS TOO LARGE. O /2 > S /DELTA T OCCURED 3 TIMES STARTING WITH POINT256

OPERATION RESVOR STRUCTURE 5

| PEAK TIME(HRS) | PEAK DISCHARGE(CFS) | PEAK ELEVATION(FEET) |
|---|---|---|
| 6.28 | 247.00 | 5437.54 |
| 10.46 | 10.90 | 5432.84 |
| 11.68 | 9.65 | 5432.74 |
| 12.68 | 9.71 | 5432.75 |
| 14.19 | 9.72 | 5432.75 |
| 18.93 | 5.79 | 5432.45 |
| 20.72 | 4.99 | 5432.38 |
| 23.58 | 4.19 | 5432.32 |

OPERATION REACH CROSS SECTION 16

| PEAK TIME(HRS) | PEAK DISCHARGE(CFS) | PEAK ELEVATION(FEET) |
|---|---|---|
| 6.45 | 230.74 | 5392.33 |
| 10.57 | 10.89 | 5390.17 |
| 11.82 | 9.48 | 5390.15 |
| 12.82 | 9.54 | 5390.15 |
| 14.33 | 9.53 | 5390.15 |
| 19.05 | 5.79 | 5390.09 |
| 23.71 | 4.13 | 5390.07 |

OPERATION ADDHYD CROSS SECTION 16

| PEAK TIME(HRS) | PEAK DISCHARGE(CFS) | PEAK ELEVATION(FEET) |
|---|---|---|
| 6.38 | 416.86 | 5393.14 |
| 10.57 | 17.62 | 5390.28 |
| 11.80 | 15.52 | 5390.25 |
| 12.80 | 15.60 | 5390.25 |
| 14.31 | 15.59 | 5390.25 |
| 19.05 | 9.30 | 5390.15 |
| 20.84 | 7.97 | 5390.13 |
| 21.79 | 7.05 | 5390.11 |
| 23.69 | 6.69 | 5390.11 |

OPERATION RUNOFF CROSS SECTION 16

| PEAK TIME(HRS) | PEAK DISCHARGE(CFS) | PEAK ELEVATION(FEET) |
|---|---|---|
| 6.20 | 158.30 | (RUNOFF) |
| 10.41 | 5.49 | (RUNOFF) |
| 11.62 | 4.95 | (RUNOFF) |
| 12.62 | 4.98 | (RUNOFF) |
| 14.12 | 4.99 | (RUNOFF) |
| 18.95 | 2.87 | (RUNOFF) |
| 23.55 | 2.10 | (RUNOFF) |

OPERATION ADDHYD CROSS SECTION 16

| PEAK TIME(HRS) | PEAK DISCHARGE(CFS) | PEAK ELEVATION(FEET) |
|---|---|---|
| 6.21 | 379.78 | 5392.98 |
| 10.45 | 12.50 | 5390.20 |
| 11.66 | 11.30 | 5390.18 |
| 12.66 | 11.38 | 5390.18 |
| 14.17 | 11.40 | 5390.18 |
| 18.95 | 6.55 | 5390.10 |
| 20.70 | 5.81 | 5390.09 |
| 21.66 | 5.02 | 5390.08 |
| 23.58 | 4.81 | 5390.08 |

OPERATION ADDHYD CROSS SECTION 16

| PEAK TIME(HRS) | PEAK DISCHARGE(CFS) | PEAK ELEVATION(FEET) |
|---|---|---|
| 6.31 | 740.69 | 5394.17 |
| 10.47 | 30.09 | 5390.48 |
| 11.73 | 26.45 | 5390.42 |
| 12.74 | 26.58 | 5390.43 |
| 14.25 | 26.57 | 5390.43 |
| 18.96 | 15.84 | 5390.25 |
| 20.78 | 13.59 | 5390.22 |
| 21.72 | 12.00 | 5390.19 |
| 23.63 | 11.35 | 5390.18 |

| TIME(HRS) | FIRST HYDROGRAPH POINT = .00 HOURS | | | | TIME INCREMENT = .10 HOURS | | | DRAINAGE AREA = 1.09 SQ.MI. | | |
|---|---|---|---|---|---|---|---|---|---|---|
| 5.00 | DISCHG | .00 | .00 | .00 | .00 | .00 | .01 | .84 | 8.13 | 40.85 | 114.95 |
| 6.00 | DISCHG | 300.66 | 494.51 | 651.71 | 740.26 | 674.78 | 560.87 | 432.00 | 328.24 | 248.22 | 192.81 |
| 7.00 | DISCHG | 156.59 | 138.49 | 125.91 | 116.13 | 107.06 | 98.95 | 90.58 | 82.58 | 76.76 | 72.27 |
| 8.00 | DISCHG | 68.25 | 64.40 | 61.36 | 57.30 | 51.88 | 46.42 | 41.43 | 37.51 | 34.75 | 32.91 |
| 9.00 | DISCHG | 31.73 | 30.99 | 30.52 | 30.24 | 30.07 | 29.97 | 29.92 | 29.90 | 29.90 | 29.92 |
| 10.00 | DISCHG | 29.94 | 29.97 | 30.00 | 30.03 | 30.06 | 30.09 | 30.00 | 29.47 | 28.16 | 25.98 |
| 11.00 | DISCHG | 23.24 | 20.88 | 19.56 | 19.66 | 21.10 | 23.26 | 25.27 | 26.37 | 26.17 | 24.69 |
| 12.00 | DISCHG | 22.48 | 20.47 | 19.35 | 19.60 | 21.13 | 23.36 | 25.40 | 26.50 | 26.33 | 24.86 |
| 13.00 | DISCHG | 22.62 | 20.47 | 18.78 | 17.59 | 16.82 | 16.33 | 16.15 | 16.53 | 17.82 | 20.07 |
| 14.00 | DISCHG | 22.76 | 25.13 | 26.42 | 26.37 | 24.98 | 22.77 | 20.62 | 18.92 | 17.74 | 16.97 |
| 15.00 | DISCHG | 16.47 | 16.15 | 15.95 | 15.82 | 15.74 | 15.69 | 15.66 | 15.64 | 15.63 | 15.63 |
| 16.00 | DISCHG | 15.63 | 15.64 | 15.64 | 15.65 | 15.66 | 15.66 | 15.67 | 15.68 | 15.68 | 15.69 |
| 17.00 | DISCHG | 15.70 | 15.70 | 15.71 | 15.72 | 15.73 | 15.73 | 15.74 | 15.75 | 15.75 | 15.76 |
| 18.00 | DISCHG | 15.77 | 15.77 | 15.78 | 15.79 | 15.79 | 15.80 | 15.81 | 15.81 | 15.82 | 15.83 |
| 19.00 | DISCHG | 15.83 | 15.79 | 15.56 | 14.97 | 14.02 | 12.89 | 11.84 | 10.94 | 10.10 | 9.26 |
| 20.00 | DISCHG | 8.47 | 7.89 | 7.76 | 8.30 | 9.51 | 11.07 | 12.48 | 13.37 | 13.58 | 13.14 |
| 21.00 | DISCHG | 12.35 | 11.57 | 11.03 | 10.87 | 11.05 | 11.42 | 11.79 | 11.99 | 11.92 | 11.59 |
| 22.00 | DISCHG | 11.12 | 10.67 | 10.31 | 10.06 | 9.89 | 9.79 | 9.72 | 9.68 | 9.66 | 9.64 |
| 23.00 | DISCHG | 9.63 | 9.65 | 9.76 | 10.02 | 10.46 | 10.96 | 11.33 | 11.23 | 10.36 | 8.70 |
| 24.00 | DISCHG | 6.64 | 4.73 | 3.24 | 2.18 | 1.45 | .96 | .62 | .40 | .25 | .15 |
| 25.00 | DISCHG | .09 | .05 | .03 | .02 | .01 | .00 | | | | |

RUNOFF VOLUME ABOVE BASEFLOW = 1.29 WATERSHED INCHES, 902.12 CFS-HRS, 74.55 ACRE-FEET; BASEFLOW = .00 CFS

OPERATION RESVOR STRUCTURE 54

| PEAK TIME(HRS) | PEAK DISCHARGE(CFS) | PEAK ELEVATION(FEET) |
|---|---|---|
| 7.14 | 133.56 | 5402.19 |
| 14.49 | 23.13 | 5396.11 |

| TIME(HRS) | FIRST HYDROGRAPH POINT = .00 HOURS | | | | TIME INCREMENT = .10 HOURS | | | DRAINAGE AREA = 1.09 SQ.MI. | | |
|---|---|---|---|---|---|---|---|---|---|---|
| 5.00 | DISCHG | .00 | .00 | .00 | .00 | .00 | .00 | .19 | 2.07 | 10.61 | 13.51 |

| | | | | | | | | | | | |
|---|---|---|---|---|---|---|---|---|---|---|---|
| 6.00 | DISCHG | 15.43 | 67.00 | 90.18 | 105.05 | 114.61 | 121.61 | 126.82 | 130.35 | 132.33 | 133.07 |
| 7.00 | DISCHG | 133.42 | 133.54 | 133.53 | 133.43 | 133.24 | 132.99 | 132.66 | 132.28 | 131.72 | 130.93 |
| 8.00 | DISCHG | 130.08 | 129.20 | 128.27 | 127.32 | 126.30 | 125.23 | 124.10 | 122.92 | 121.71 | 120.49 |
| 9.00 | DISCHG | 119.27 | 118.04 | 116.83 | 115.63 | 114.44 | 113.26 | 112.10 | 110.75 | 109.39 | 108.06 |
| 0.00 | DISCHG | 106.75 | 105.46 | 104.20 | 102.93 | 101.00 | 99.12 | 97.29 | 95.50 | 93.73 | 91.96 |
| 1.00 | DISCHG | 90.18 | 88.28 | 86.38 | 84.52 | 82.72 | 81.03 | 79.45 | 77.71 | 69.61 | 62.66 |
| 12.00 | DISCHG | 56.51 | 51.00 | 46.11 | 41.92 | 38.52 | 35.96 | 34.14 | 32.85 | 31.84 | 30.86 |
| 3.00 | DISCHG | 29.74 | 28.45 | 27.06 | 25.66 | 24.33 | 23.11 | 22.03 | 21.13 | 20.51 | 20.26 |
| 4.00 | DISCHG | 20.45 | 21.00 | 21.75 | 22.48 | 22.98 | 23.12 | 22.90 | 22.41 | 21.76 | 21.07 |
| 15.00 | DISCHG | 20.39 | 19.74 | 19.16 | 18.65 | 18.19 | 17.80 | 17.47 | 17.18 | 16.94 | 16.73 |
| 16.00 | DISCHG | 16.56 | 16.42 | 16.29 | 16.19 | 16.11 | 16.04 | 16.00 | 16.00 | 15.99 | 15.99 |
| 7.00 | DISCHG | 15.99 | 15.98 | 15.98 | 15.98 | 15.98 | 15.97 | 15.97 | 15.97 | 15.97 | 15.96 |
| 18.00 | DISCHG | 15.96 | 15.96 | 15.96 | 15.96 | 15.96 | 15.95 | 15.95 | 15.95 | 15.95 | 15.95 |
| 19.00 | DISCHG | 15.95 | 15.95 | 15.94 | 15.94 | 15.92 | 15.90 | 15.86 | 15.82 | 15.77 | 15.71 |
| 0.00 | DISCHG | 15.64 | 15.57 | 15.49 | 15.42 | 15.35 | 15.30 | 15.27 | 15.24 | 15.23 | 15.21 |
| 1.00 | DISCHG | 15.18 | 15.15 | 15.11 | 15.07 | 15.03 | 14.99 | 14.96 | 14.93 | 14.90 | 14.87 |
| 22.00 | DISCHG | 14.84 | 14.80 | 14.75 | 14.71 | 14.66 | 14.61 | 14.57 | 14.52 | 14.47 | 14.42 |
| 3.00 | DISCHG | 14.38 | 14.33 | 14.28 | 14.24 | 14.20 | 14.17 | 14.14 | 14.11 | 14.08 | 14.03 |
| 4.00 | DISCHG | 13.97 | 13.89 | 13.79 | 13.68 | 13.56 | 13.44 | 13.32 | 13.19 | 13.06 | 11.99 |
| 25.00 | DISCHG | 10.18 | 7.50 | 2.97 | 1.68 | .95 | .54 | .30 | .17 | .09 | .05 |
| 26.00 | DISCHG | .03 | .02 | .01 | .01 | | | | | | |

UNOFF VOLUME ABOVE BASEFLOW = 1.29 WATERSHED INCHES, 902.50 CFS-HRS, 74.58 ACRE-FEET; BASEFLOW = .00 CFS

*** WARNING REACH 14 ATT-KIN COEFF.(C) GREATER THAN 0.667, CONSIDER REDUCING MAIN TIME INCREMENT ***

PERATION REACH CROSS SECTION 14

| PEAK TIME(HRS) | PEAK DISCHARGE(CFS) | PEAK ELEVATION(FEET) |
|---|---|---|
| 7.28 | 133.53 | 5368.03 |
| 14.61 | 23.07 | 5366.42 |

PERATION RUNOFF CROSS SECTION 14

| PEAK TIME(HRS) | PEAK DISCHARGE(CFS) | PEAK ELEVATION(FEET) |
|---|---|---|
| 6.07 | 136.48 | (RUNOFF) |
| 10.38 | 3.10 | (RUNOFF) |
| 11.51 | 2.99 | (RUNOFF) |
| 12.51 | 3.01 | (RUNOFF) |
| 14.01 | 3.02 | (RUNOFF) |
| 23.47 | 1.23 | (RUNOFF) |

ERATION ADDHYD CROSS SECTION 14



| PEAK TIME(HRS) | PEAK DISCHARGE(CFS) | PEAK ELEVATION(FEET) |
|---|---|---|
| 6.19 | 158.96 | 5368.21 |
| 7.25 | 141.12 | 5368.09 |

| | | |
|---|---|---|
| 14.60 | 24.70 | 5366.44 |
| 23.37 | 15.45 | 5366.28 |

| ME(HRS) | | FIRST HYDROGRAPH POINT = .00 HOURS | | | | TIME INCREMENT = .10 HOURS | | | DRAINAGE AREA = | | 1.18 SQ.MI. |
|---|---|---|---|---|---|---|---|---|---|---|---|
| 5.00 | DISCHG | .00 | .00 | .00 | .00 | .00 | .04 | 3.11 | 22.27 | 59.14 | 104.19 |
| 6.00 | DISCHG | 138.75 | 149.59 | 158.77 | 143.48 | 135.51 | 134.81 | 136.60 | 138.28 | 139.51 | 140.42 |
| 7.00 | DISCHG | 140.78 | 140.99 | 141.11 | 141.11 | 141.02 | 140.85 | 140.49 | 139.77 | 138.96 | 138.18 |
| 8.00 | DISCHG | 137.31 | 136.17 | 134.42 | 132.58 | 131.10 | 129.84 | 128.66 | 127.49 | 126.30 | 125.08 |
| 9.00 | DISCHG | 123.86 | 122.63 | 121.41 | 120.20 | 119.00 | 117.81 | 116.63 | 115.47 | 114.15 | 112.81 |
| 10.00 | DISCHG | 111.47 | 110.16 | 108.87 | 107.60 | 106.33 | 104.52 | 102.52 | 100.25 | 97.99 | 95.95 |
| 11.00 | DISCHG | 94.06 | 92.35 | 90.88 | 89.44 | 87.83 | 86.15 | 84.37 | 82.35 | 80.18 | 73.05 |
| 12.00 | DISCHG | 66.00 | 59.76 | 54.51 | 49.93 | 45.84 | 42.39 | 39.56 | 37.14 | 35.26 | 33.90 |
| 13.00 | DISCHG | 32.78 | 31.62 | 30.34 | 28.96 | 27.57 | 26.23 | 25.12 | 24.44 | 23.98 | 23.56 |
| 14.00 | DISCHG | 23.36 | 23.37 | 23.42 | 23.67 | 24.13 | 24.54 | 24.70 | 24.53 | 24.09 | 23.49 |
| 15.00 | DISCHG | 22.81 | 22.12 | 21.47 | 20.88 | 20.35 | 19.88 | 19.48 | 19.13 | 18.83 | 18.58 |
| 16.00 | DISCHG | 18.36 | 18.18 | 18.03 | 17.90 | 17.80 | 17.71 | 17.63 | 17.59 | 17.58 | 17.57 |
| 17.00 | DISCHG | 17.57 | 17.57 | 17.57 | 17.56 | 17.56 | 17.56 | 17.56 | 17.56 | 17.55 | 17.55 |
| 18.00 | DISCHG | 17.55 | 17.55 | 17.55 | 17.55 | 17.54 | 17.54 | 17.54 | 17.54 | 17.54 | 17.54 |
| 19.00 | DISCHG | 17.54 | 17.48 | 17.30 | 17.11 | 16.99 | 16.93 | 16.85 | 16.72 | 16.57 | 16.47 |
| 20.00 | DISCHG | 16.38 | 16.39 | 16.58 | 16.78 | 16.87 | 16.88 | 16.81 | 16.62 | 16.41 | 16.28 |
| 21.00 | DISCHG | 16.22 | 16.19 | 16.24 | 16.30 | 16.31 | 16.29 | 16.24 | 16.12 | 16.00 | 15.91 |
| 22.00 | DISCHG | 15.86 | 15.81 | 15.77 | 15.72 | 15.68 | 15.63 | 15.58 | 15.54 | 15.49 | 15.44 |
| 23.00 | DISCHG | 15.39 | 15.37 | 15.41 | 15.45 | 15.45 | 15.43 | 15.30 | 14.94 | 14.55 | 14.31 |
| 24.00 | DISCHG | 14.16 | 14.05 | 13.94 | 13.83 | 13.71 | 13.59 | 13.47 | 13.34 | 13.22 | 13.09 |
| 25.00 | DISCHG | 12.20 | 10.57 | 8.09 | 3.96 | 2.12 | 1.17 | .66 | .37 | .21 | .12 |
| 26.00 | DISCHG | .06 | .04 | .02 | .01 | .01 | .00 | | | | |

RUNOFF VOLUME ABOVE BASEFLOW = 1.33 WATERSHED INCHES, 1009.65 CFS-HRS, 83.44 ACRE-FEET; BASEFLOW = .00 CFS

XECUTIVE CONTROL OPERATION ENDCMP RECORD ID

COMPUTATIONS COMPLETED FOR PASS 2

EXECUTIVE CONTROL OPERATION INCREM RECORD ID

MAIN TIME INCREMENT = .10 HOURS

XECUTIVE CONTROL OPERATION COMPUT RECORD ID

FROM XSECTION 24

TO XSECTION 14

STARTING TIME = .00 RAIN DEPTH = 2.40 RAIN DURATION= 1.00 RAIN TABLE NO.= 7 ANT. MOIST. COND= 2
ALTERNATE NO.= 1 STORM NO.= 3 MAIN TIME INCREMENT = .10 HOURS

PERATION RUNOFF CROSS SECTION 24



| PEAK TIME(HRS) | PEAK DISCHARGE(CFS) | PEAK ELEVATION(FEET) |
|---|---|---|
| 6.15 | 145.67 | (RUNOFF) |
| 10.41 | 4.79 | (RUNOFF) |

| | | |
|---|---|---|
| 11.57 | 4.49 | (RUNOFF) |
| 12.57 | 4.51 | (RUNOFF) |
| 14.07 | 4.54 | (RUNOFF) |
| 18.88 | 2.52 | (RUNOFF) |
| 23.50 | 1.90 | (RUNOFF) |

ERATION RESVOR STRUCTURE 7

| PEAK TIME(HRS) | PEAK DISCHARGE(CFS) | PEAK ELEVATION(FEET) |
|---|---|---|
| 6.18 | 145.04 | 5453.07 |
| 10.45 | 4.79 | 5450.80 |
| 11.62 | 4.42 | 5450.74 |
| 12.63 | 4.45 | 5450.74 |
| 14.13 | 4.48 | 5450.75 |
| 18.92 | 2.52 | 5450.42 |
| 23.56 | 1.89 | 5450.31 |

PERATION RUNOFF CROSS SECTION 22

| PEAK TIME(HRS) | PEAK DISCHARGE(CFS) | PEAK ELEVATION(FEET) |
|---|---|---|
| 6.10 | 80.86 | (RUNOFF) |
| 7.47 | 5.73 | (RUNOFF) |
| 10.43 | 2.42 | (RUNOFF) |
| 11.52 | 2.36 | (RUNOFF) |
| 12.51 | 2.38 | (RUNOFF) |
| 14.02 | 2.40 | (RUNOFF) |
| 23.47 | 1.01 | (RUNOFF) |

OPERATION RESVOR STRUCTURE 9

| PEAK TIME(HRS) | PEAK DISCHARGE(CFS) | PEAK ELEVATION(FEET) |
|---|---|---|
| 6.10 | 76.61 | 5491.39 |
| 7.47 | 5.72 | 5489.34 |
| 10.45 | 2.43 | 5488.61 |
| 12.57 | 2.36 | 5488.59 |
| 14.07 | 2.38 | 5488.60 |

**WARNING - LACK OF LOW FLOW DEFINITION FOR XSECT TABLE 20. MAX.FLOW LESS THAN 2ND TABLE VALUE.

*** WARNING REACH 20 ATT-KIN COEFF.(C) GREATER THAN 0.667, CONSIDER REDUCING MAIN TIME INCREMENT ***



OPERATION RUNOFF CROSS SECTION 20

| PEAK TIME(HRS) | PEAK DISCHARGE(CFS) | PEAK ELEVATION(FEET) |
|---|---|---|
| 6.20 | 60.83 | (RUNOFF) |

OPERATION ADDHYD CROSS SECTION 20

| PEAK TIME(HRS) | PEAK DISCHARGE(CFS) | PEAK ELEVATION(FEET) |
|---|---|---|
| 6.23 | 131.97 | 5435.92 |
| 10.46 | 4.86 | 5434.08 |
| 11.66 | 4.49 | 5434.08 |
| 12.65 | 4.52 | 5434.08 |
| 14.16 | 4.56 | 5434.08 |
| 18.95 | 2.59 | 5434.04 |
| 23.57 | 1.94 | 5434.03 |

OPERATION RESVOR STRUCTURE 6

| PEAK TIME(HRS) | PEAK DISCHARGE(CFS) | PEAK ELEVATION(FEET) |
|---|---|---|
| 6.26 | 130.45 | 5437.86 |
| 10.47 | 4.86 | 5434.69 |
| 11.70 | 4.45 | 5434.64 |
| 12.70 | 4.48 | 5434.64 |
| 14.21 | 4.52 | 5434.65 |
| 18.96 | 2.59 | 5434.37 |
| 23.61 | 1.91 | 5434.27 |

'ERATION RUNOFF CROSS SECTION 18

| PEAK TIME(HRS) | PEAK DISCHARGE(CFS) | PEAK ELEVATION(FEET) |
|---|---|---|
| 6.27 | 142.99 | (RUNOFF) |
| 10.46 | 7.34 | (RUNOFF) |
| 11.65 | 6.53 | (RUNOFF) |
| 12.65 | 6.59 | (RUNOFF) |
| 14.16 | 6.62 | (RUNOFF) |
| 18.91 | 3.97 | (RUNOFF) |
| 23.56 | 2.90 | (RUNOFF) |

*** WARNING - STRUCTURE 5 DELTA T IS TOO LARGE. O /2 > S /DELTA T OCCURED 3 TIMES STARTING WITH POINT255

PERATION RESVOR STRUCTURE 5



** WARNING-MAIN TIME INCREMENT MAY BE TOO LARGE.
COMPUTED PEAK( 141.63) AT EXCEEDS MAX. ADJACENT HYDROGRAPH COORDINATE BY 6 %.
STRUCTURE 5

| PEAK TIME(HRS) | PEAK DISCHARGE(CFS) | PEAK ELEVATION(FEET) |
|---|---|---|
| 6.35 | 141.63 | 5437.22 |
| 10.47 | 7.33 | 5432.56 |
| 11.68 | 6.51 | 5432.50 |
| 12.68 | 6.58 | 5432.51 |
| 14.19 | 6.61 | 5432.51 |
| 18.95 | 3.97 | 5432.31 |
| 23.58 | 2.88 | 5432.22 |

| IE(HRS) | | FIRST HYDROGRAPH POINT = | .00 HOURS | | TIME INCREMENT = | .10 HOURS | | DRAINAGE AREA = | .43 SQ.MI. | |
|---|---|---|---|---|---|---|---|---|---|---|
| 5.00 | DISCHG | .00 | .00 | .00 | .00 | .00 | .00 | .00 | .58 | 5.40 | 21.19 |
| 6.00 | DISCHG | 38.57 | 54.30 | 67.08 | 133.49 | 133.04 | 108.57 | 83.12 | 68.94 | 65.87 | 61.56 |
| 7.00 | DISCHG | 56.48 | 48.65 | 39.47 | 28.70 | 20.78 | 18.69 | 18.37 | 17.65 | 16.92 | 16.10 |
| 8.00 | DISCHG | 15.41 | 14.82 | 14.06 | 12.97 | 11.64 | 10.35 | 9.31 | 8.57 | 8.08 | 7.77 |
| 9.00 | DISCHG | 7.57 | 7.44 | 7.35 | 7.30 | 7.27 | 7.25 | 7.24 | 7.24 | 7.25 | 7.26 |
| 10.00 | DISCHG | 7.27 | 7.28 | 7.29 | 7.31 | 7.32 | 7.33 | 7.28 | 7.06 | 6.59 | 5.96 |
| 11.00 | DISCHG | 5.32 | 4.86 | 4.73 | 4.98 | 5.47 | 6.01 | 6.41 | 6.50 | 6.25 | 5.75 |
| 12.00 | DISCHG | 5.21 | 4.81 | 4.72 | 4.98 | 5.49 | 6.05 | 6.46 | 6.57 | 6.32 | 5.82 |
| 13.00 | DISCHG | 5.27 | 4.79 | 4.45 | 4.24 | 4.10 | 4.01 | 4.01 | 4.21 | 4.68 | 5.33 |
| 14.00 | DISCHG | 5.98 | 6.46 | 6.61 | 6.36 | 5.87 | 5.31 | 4.84 | 4.51 | 4.30 | 4.16 |
| 15.00 | DISCHG | 4.06 | 4.00 | 3.96 | 3.93 | 3.91 | 3.90 | 3.90 | 3.89 | 3.89 | 3.89 |
| 16.00 | DISCHG | 3.89 | 3.89 | 3.90 | 3.90 | 3.90 | 3.91 | 3.91 | 3.91 | 3.91 | 3.92 |
| 17.00 | DISCHG | 3.92 | 3.92 | 3.93 | 3.93 | 3.93 | 3.93 | 3.94 | 3.94 | 3.94 | 3.94 |
| 18.00 | DISCHG | 3.95 | 3.95 | 3.95 | 3.96 | 3.96 | 3.96 | 3.96 | 3.97 | 3.97 | 3.97 |
| 19.00 | DISCHG | 3.97 | 3.95 | 3.85 | 3.64 | 3.37 | 3.10 | 2.86 | 2.64 | 2.44 | 2.23 |
| 20.00 | DISCHG | 2.05 | 1.95 | 2.00 | 2.24 | 2.61 | 2.99 | 3.29 | 3.43 | 3.37 | 3.19 |
| 21.00 | DISCHG | 2.98 | 2.81 | 2.73 | 2.76 | 2.84 | 2.94 | 3.02 | 3.03 | 2.97 | 2.86 |
| 22.00 | DISCHG | 2.74 | 2.64 | 2.56 | 2.52 | 2.49 | 2.47 | 2.45 | 2.45 | 2.44 | 2.44 |
| 23.00 | DISCHG | 2.44 | 2.45 | 2.49 | 2.59 | 2.71 | 2.83 | 2.88 | 2.77 | 2.42 | 1.92 |
| 24.00 | DISCHG | 1.41 | .98 | .67 | .46 | .32 | .21 | .14 | .09 | .06 | .04 |
| 25.00 | DISCHG | .03 | .02 | .01 | .00 | | | | | | |

OPERATION REACH CROSS SECTION 16

| PEAK TIME(HRS) | PEAK DISCHARGE(CFS) | PEAK ELEVATION(FEET) |
|---|---|---|
| 6.52 | 120.98 | 5391.73 |
| 10.58 | 7.32 | 5390.12 |
| 11.83 | 6.36 | 5390.10 |
| 12.83 | 6.42 | 5390.10 |
| 14.34 | 6.42 | 5390.10 |
| 19.06 | 3.97 | 5390.06 |
| 23.72 | 2.83 | 5390.05 |



OPERATION ADDHYD CROSS SECTION 16

| PEAK TIME(HRS) | PEAK DISCHARGE(CFS) | PEAK ELEVATION(FEET) |
|---|---|---|
| 6.44 | 228.16 | 5392.32 |
| 10.57 | 12.10 | 5390.19 |
| 11.80 | 10.63 | 5390.17 |
| 12.81 | 10.72 | 5390.17 |
| 14.32 | 10.74 | 5390.17 |
| 19.05 | 6.49 | 5390.10 |
| 23.70 | 4.67 | 5390.07 |

OPERATION RUNOFF CROSS SECTION 16

| PEAK TIME(HRS) | PEAK DISCHARGE(CFS) | PEAK ELEVATION(FEET) |
|---|---|---|
| 6.21 | 98.69 | (RUNOFF) |

| | | |
|---|---|---|
| 10.43 | 3.85 | (RUNOFF) |
| 11.62 | 3.48 | (RUNOFF) |
| 12.62 | 3.52 | (RUNOFF) |
| 14.12 | 3.53 | (RUNOFF) |
| 18.95 | 2.05 | (RUNOFF) |
| 23.55 | 1.50 | (RUNOFF) |

)PERATION ADDHYD CROSS SECTION 16

| PEAK TIME(HRS) | PEAK DISCHARGE(CFS) | PEAK ELEVATION(FEET) |
|---|---|---|
| 6.24 | 227.40 | 5392.32 |
| 10.45 | 8.72 | 5390.14 |
| 11.67 | 7.88 | 5390.13 |
| 12.67 | 7.96 | 5390.13 |
| 14.17 | 7.99 | 5390.13 |
| 18.95 | 4.64 | 5390.07 |
| 23.58 | 3.41 | 5390.05 |

ERATION ADDHYD CROSS SECTION 16



| PEAK TIME(HRS) | PEAK DISCHARGE(CFS) | PEAK ELEVATION(FEET) |
|---|---|---|
| 6.33 | 407.50 | 5393.10 |
| 10.48 | 20.80 | 5390.33 |
| 11.74 | 18.26 | 5390.29 |
| 12.74 | 18.40 | 5390.29 |
| 14.25 | 18.42 | 5390.29 |
| 18.96 | 11.13 | 5390.18 |
| 20.79 | 9.50 | 5390.15 |
| 21.73 | 8.43 | 5390.13 |
| 23.63 | 7.98 | 5390.13 |

-IME(HRS) FIRST HYDROGRAPH POINT = .00 HOURS TIME INCREMENT = .10 HOURS DRAINAGE AREA = 1.09 SQ.MI.

| | | | | | | | | | | | |
|---|---|---|---|---|---|---|---|---|---|---|---|
| 5.00 | DISCHG | .00 | .00 | .00 | .00 | .00 | .00 | .18 | 2.63 | 16.50 | 54.49 |
| 6.00 | DISCHG | 131.90 | 277.98 | 374.62 | 405.45 | 399.25 | 342.11 | 272.71 | 211.84 | 168.44 | 143.21 |
| 7.00 | DISCHG | 124.99 | 110.39 | 97.06 | 84.57 | 71.76 | 60.59 | 54.89 | 51.97 | 49.81 | 47.79 |
| 8.00 | DISCHG | 45.76 | 43.86 | 41.86 | 39.27 | 35.91 | 32.18 | 28.76 | 26.01 | 24.01 | 22.69 |
| 9.00 | DISCHG | 21.86 | 21.35 | 21.03 | 20.83 | 20.72 | 20.66 | 20.63 | 20.62 | 20.63 | 20.64 |
| 10.00 | DISCHG | 20.67 | 20.69 | 20.72 | 20.75 | 20.78 | 20.80 | 20.74 | 20.38 | 19.47 | 17.98 |
| 11.00 | DISCHG | 16.19 | 14.61 | 13.70 | 13.71 | 14.63 | 16.05 | 17.40 | 18.19 | 18.09 | 17.12 |
| 12.00 | DISCHG | 15.68 | 14.34 | 13.56 | 13.69 | 14.67 | 16.15 | 17.53 | 18.33 | 18.24 | 17.28 |
| 13.00 | DISCHG | 15.82 | 14.37 | 13.21 | 12.36 | 11.79 | 11.43 | 11.29 | 11.53 | 12.40 | 13.91 |
| 14.00 | DISCHG | 15.73 | 17.36 | 18.30 | 18.31 | 17.40 | 15.97 | 14.51 | 13.34 | 12.50 | 11.93 |
| 15.00 | DISCHG | 11.56 | 11.32 | 11.17 | 11.07 | 11.01 | 10.98 | 10.95 | 10.94 | 10.94 | 10.94 |
| 16.00 | DISCHG | 10.94 | 10.94 | 10.95 | 10.95 | 10.96 | 10.97 | 10.97 | 10.98 | 10.99 | 10.99 |
| 17.00 | DISCHG | 11.00 | 11.01 | 11.01 | 11.02 | 11.02 | 11.03 | 11.04 | 11.04 | 11.05 | 11.06 |
| 18.00 | DISCHG | 11.06 | 11.07 | 11.08 | 11.08 | 11.09 | 11.09 | 11.10 | 11.11 | 11.11 | 11.12 |
| 19.00 | DISCHG | 11.12 | 11.09 | 10.94 | 10.54 | 9.90 | 9.13 | 8.40 | 7.76 | 7.17 | 6.57 |
| 20.00 | DISCHG | 6.02 | 5.60 | 5.50 | 5.85 | 6.66 | 7.71 | 8.68 | 9.31 | 9.49 | 9.23 |
| 21.00 | DISCHG | 8.72 | 8.19 | 7.82 | 7.69 | 7.79 | 8.03 | 8.28 | 8.43 | 8.39 | 8.17 |
| 22.00 | DISCHG | 7.86 | 7.54 | 7.29 | 7.11 | 6.99 | 6.91 | 6.86 | 6.83 | 6.81 | 6.80 |

| | | | | | | | | | | | |
|---|---|---|---|---|---|---|---|---|---|---|---|
| 23.00 | DISCHG | 6.79 | 6.81 | 6.88 | 7.06 | 7.36 | 7.71 | 7.97 | 7.90 | 7.32 | 6.20 |
| 24.00 | DISCHG | 4.80 | 3.47 | 2.41 | 1.64 | 1.10 | .73 | .48 | .30 | .19 | .12 |
| 25.00 | DISCHG | .07 | .04 | .03 | .02 | .01 | .00 | | | | |

RUNOFF VOLUME ABOVE BASEFLOW = .82 WATERSHED INCHES, 576.08 CFS-HRS, 47.61 ACRE-FEET; BASEFLOW = .00 CFS

OPERATION RESVOR STRUCTURE 54

| PEAK TIME(HRS) | PEAK DISCHARGE(CFS) | PEAK ELEVATION(FEET) |
|---|---|---|
| 7.11 | 109.67 | 5399.74 |
| 12.93 | 16.84 | 5396.01 |
| 14.51 | 15.81 | 5395.94 |
| 23.70 | 7.83 | 5393.79 |

TIME(HRS) FIRST HYDROGRAPH POINT = .00 HOURS TIME INCREMENT = .10 HOURS DRAINAGE AREA = 1.09 SQ.MI.

| | | | | | | | | | | | |
|---|---|---|---|---|---|---|---|---|---|---|---|
| 5.00 | DISCHG | .00 | .00 | .00 | .00 | .00 | .00 | .04 | .64 | 5.06 | 12.70 |
| 6.00 | DISCHG | 13.77 | 15.66 | 59.48 | 83.95 | 92.70 | 100.06 | 104.62 | 106.93 | 108.32 | 109.12 |



| | | | | | | | | | | | |
|---|---|---|---|---|---|---|---|---|---|---|---|
| 7.00 | DISCHG | 109.54 | 109.67 | 109.57 | 109.26 | 108.74 | 108.02 | 107.18 | 106.28 | 105.35 | 104.40 |
| 8.00 | DISCHG | 103.44 | 102.14 | 100.57 | 98.98 | 97.35 | 95.67 | 93.94 | 92.18 | 90.40 | 88.55 |
| 9.00 | DISCHG | 86.70 | 84.88 | 83.10 | 81.36 | 79.67 | 78.02 | 69.09 | 61.46 | 55.04 | 49.62 |
| 10.00 | DISCHG | 45.06 | 41.23 | 38.00 | 35.28 | 33.00 | 31.08 | 29.45 | 28.06 | 26.78 | 25.51 |
| 11.00 | DISCHG | 24.18 | 22.80 | 21.44 | 20.22 | 19.27 | 18.65 | 18.35 | 18.26 | 18.24 | 18.14 |
| 12.00 | DISCHG | 17.87 | 17.42 | 16.87 | 16.36 | 16.02 | 16.00 | 16.06 | 16.35 | 16.65 | 16.83 |
| 13.00 | DISCHG | 16.78 | 16.52 | 16.09 | 15.97 | 15.93 | 15.89 | 15.85 | 15.80 | 15.77 | 15.74 |
| 14.00 | DISCHG | 15.73 | 15.74 | 15.76 | 15.78 | 15.80 | 15.81 | 15.81 | 15.79 | 15.76 | 15.73 |
| 15.00 | DISCHG | 15.69 | 15.65 | 15.60 | 15.56 | 15.51 | 15.47 | 15.42 | 15.38 | 15.34 | 15.29 |
| 16.00 | DISCHG | 15.25 | 15.21 | 15.17 | 15.12 | 15.08 | 15.04 | 15.00 | 14.96 | 14.92 | 14.88 |
| 17.00 | DISCHG | 14.85 | 14.81 | 14.77 | 14.73 | 14.70 | 14.66 | 14.62 | 14.59 | 14.55 | 14.52 |
| 18.00 | DISCHG | 14.49 | 14.45 | 14.42 | 14.39 | 14.35 | 14.32 | 14.29 | 14.26 | 14.23 | 14.20 |
| 19.00 | DISCHG | 14.17 | 14.13 | 14.10 | 14.07 | 14.03 | 13.99 | 13.94 | 13.88 | 13.82 | 13.75 |
| 20.00 | DISCHG | 13.67 | 13.60 | 13.52 | 13.44 | 13.37 | 13.31 | 13.26 | 13.21 | 13.18 | 13.14 |
| 21.00 | DISCHG | 13.10 | 13.05 | 13.00 | 12.24 | 11.55 | 11.00 | 10.56 | 10.23 | 9.95 | 9.69 |
| 22.00 | DISCHG | 9.44 | 9.17 | 8.60 | 7.72 | 7.30 | 7.08 | 6.96 | 6.89 | 6.85 | 6.82 |
| 23.00 | DISCHG | 6.81 | 6.80 | 6.83 | 6.92 | 7.10 | 7.38 | 7.67 | 7.83 | 7.69 | 7.10 |
| 24.00 | DISCHG | 6.09 | 4.85 | 3.64 | 2.86 | 2.21 | 1.64 | 1.19 | .84 | .58 | .39 |
| 25.00 | DISCHG | .26 | .17 | .11 | .07 | .04 | .03 | .01 | .01 | .00 | |

RUNOFF VOLUME ABOVE BASEFLOW = .82 WATERSHED INCHES, 575.57 CFS-HRS, 47.57 ACRE-FEET; BASEFLOW = .00 CFS

*** WARNING REACH 14 ATT-KIN COEFF.(C) GREATER THAN 0.667, CONSIDER REDUCING MAIN TIME INCREMENT ***

OPERATION REACH CROSS SECTION 14

| PEAK TIME(HRS) | PEAK DISCHARGE(CFS) | PEAK ELEVATION(FEET) |
|---|---|---|
| 7.24 | 109.63 | 5367.87 |
| 13.05 | 16.80 | 5366.30 |
| 14.64 | 15.81 | 5366.28 |
| 23.82 | 7.79 | 5366.14 |

RATION RUNOFF  CROSS SECTION  14

| PEAK TIME(HRS) | PEAK DISCHARGE(CFS) | PEAK ELEVATION(FEET) |
|---|---|---|
| 6.08 | 93.78 | (RUNOFF) |
| 7.45 | 5.55 | (RUNOFF) |
| 10.39 | 2.28 | (RUNOFF) |
| 12.51 | 2.23 | (RUNOFF) |
| 14.01 | 2.23 | (RUNOFF) |

ERATION ADDHYD  CROSS SECTION  14



| PEAK TIME(HRS) | PEAK DISCHARGE(CFS) | PEAK ELEVATION(FEET) |
|---|---|---|
| 6.09 | 106.52 | 5367.85 |
| 7.23 | 115.17 | 5367.91 |
| 14.00 | 17.98 | 5366.32 |
| 21.25 | 13.95 | 5366.25 |
| 23.68 | 8.18 | 5366.15 |

ME(HRS)  FIRST HYDROGRAPH POINT =  .00 HOURS  TIME INCREMENT =  .10 HOURS  DRAINAGE AREA =  1.18 SQ.MI.

| | | | | | | | | | | | |
|---|---|---|---|---|---|---|---|---|---|---|---|
| 5.00 | DISCHG | .00 | .00 | .00 | .00 | .00 | .00 | 1.09 | 10.88 | 33.63 | 64.39 |
| 6.00 | DISCHG | 95.28 | 106.20 | 86.40 | 91.90 | 101.01 | 105.47 | 109.80 | 112.38 | 113.43 | 114.13 |
| 7.00 | DISCHG | 114.64 | 114.99 | 115.16 | 115.12 | 114.86 | 114.40 | 113.65 | 112.55 | 111.35 | 110.25 |
| 8.00 | DISCHG | 109.21 | 108.02 | 106.15 | 103.98 | 102.02 | 100.22 | 98.47 | 96.71 | 94.94 | 93.16 |
| 9.00 | DISCHG | 91.32 | 89.47 | 87.65 | 85.86 | 84.11 | 82.41 | 80.75 | 73.40 | 65.83 | 59.16 |
| 10.00 | DISCHG | 53.48 | 48.68 | 44.63 | 41.22 | 38.36 | 35.95 | 33.82 | 31.79 | 29.98 | 28.47 |
| 11.00 | DISCHG | 27.10 | 25.84 | 24.77 | 23.74 | 22.69 | 21.76 | 21.01 | 20.31 | 19.83 | 19.59 |
| 12.00 | DISCHG | 19.41 | 19.22 | 19.13 | 18.95 | 18.63 | 18.35 | 18.19 | 17.91 | 17.81 | 17.91 |
| 13.00 | DISCHG | 18.02 | 17.98 | 17.75 | 17.36 | 17.18 | 17.12 | 17.17 | 17.45 | 17.76 | 17.92 |
| 14.00 | DISCHG | 17.98 | 17.91 | 17.62 | 17.30 | 17.12 | 17.05 | 17.02 | 16.99 | 16.97 | 16.94 |
| 15.00 | DISCHG | 16.90 | 16.87 | 16.82 | 16.78 | 16.74 | 16.69 | 16.65 | 16.61 | 16.56 | 16.52 |
| 16.00 | DISCHG | 16.48 | 16.43 | 16.39 | 16.35 | 16.31 | 16.27 | 16.23 | 16.19 | 16.15 | 16.11 |
| 17.00 | DISCHG | 16.07 | 16.03 | 15.99 | 15.96 | 15.92 | 15.88 | 15.85 | 15.81 | 15.78 | 15.74 |
| 18.00 | DISCHG | 15.71 | 15.67 | 15.64 | 15.61 | 15.57 | 15.54 | 15.51 | 15.48 | 15.45 | 15.42 |
| 19.00 | DISCHG | 15.38 | 15.31 | 15.15 | 14.98 | 14.86 | 14.79 | 14.70 | 14.58 | 14.45 | 14.34 |
| 20.00 | DISCHG | 14.26 | 14.24 | 14.36 | 14.49 | 14.53 | 14.52 | 14.44 | 14.27 | 14.09 | 13.97 |
| 21.00 | DISCHG | 13.90 | 13.86 | 13.87 | 13.89 | 13.32 | 12.67 | 12.08 | 11.55 | 11.12 | 10.78 |
| 22.00 | DISCHG | 10.50 | 10.23 | 9.96 | 9.46 | 8.65 | 8.15 | 7.87 | 7.72 | 7.63 | 7.57 |
| 23.00 | DISCHG | 7.54 | 7.55 | 7.60 | 7.68 | 7.79 | 7.97 | 8.15 | 8.18 | 8.10 | 7.88 |
| 24.00 | DISCHG | 7.32 | 6.39 | 5.20 | 3.99 | 3.11 | 2.40 | 1.80 | 1.32 | .94 | .66 |
| 25.00 | DISCHG | .45 | .30 | .20 | .13 | .08 | .05 | .03 | .02 | .01 | .00 |

RUNOFF VOLUME ABOVE BASEFLOW =  .86 WATERSHED INCHES,  650.90 CFS-HRS,  53.79 ACRE-FEET;  BASEFLOW =  .00 CFS

EXECUTIVE CONTROL OPERATION ENDCMP  RECORD ID

COMPUTATIONS COMPLETED FOR PASS  3

EXECUTIVE CONTROL OPERATION ENDJOB  RECORD ID

SUMMARY TABLE 1 - SELECTED RESULTS OF STANDARD AND EXECUTIVE CONTROL INSTRUCTIONS IN THE ORDER PERFORMED
(A STAR(*) AFTER THE PEAK DISCHARGE TIME AND RATE (CFS) VALUES INDICATES A FLAT TOP HYDROGRAPH
A QUESTION MARK(?) INDICATES A HYDROGRAPH WITH PEAK AS LAST POINT.)

| SECTION/ STRUCTURE ID | STANDARD CONTROL OPERATION | DRAINAGE AREA (SQ MI) | RAIN TABLE # | ANTEC MOIST COND | MAIN TIME INCREM (HR) | PRECIPITATION BEGIN (HR) | PRECIPITATION AMOUNT (IN) | PRECIPITATION DURATION (HR) | RUNOFF AMOUNT (IN) | PEAK DISCHARGE ELEVATION (FT) | PEAK DISCHARGE TIME (HR) | PEAK DISCHARGE RATE (CFS) | PEAK DISCHARGE RATE (CSM) |
|---|---|---|---|---|---|---|---|---|---|---|---|---|---|
| ALTERNATE 1 STORM 1 | | | | | | | | | | | | | |
| XSECTION 24 | RUNOFF | .22 | 7 | 2 | .10 | .0 | 3.40 | 24.00 | 1.78 | --- | 6.13 | 274.90 | 1238.3 |
| STRUCTURE 7 | RESVOR | .22 | 7 | 2 | .10 | .0 | 3.40 | 24.00 | 1.78 | 5453.66 | 6.16 | 271.90 | 1224.8 |
| SECTION 16 | REACH | .22 | 7 | 2 | .10 | .0 | 3.40 | 24.00 | 1.78 | 5392.44 | 6.30 | 254.93 | 1148.3 |
| SECTION 22 | RUNOFF | .12 | 7 | 2 | .10 | .0 | 3.40 | 24.00 | 1.63 | --- | 6.08 | 156.29 | 1291.6 |
| STRUCTURE 9 | RESVOR | .12 | 7 | 2 | .10 | .0 | 3.40 | 24.00 | 1.64 | 5491.90 | 6.09 | 159.97 | 1322.1 |
| SECTION 20 | REACH | .12 | 7 | 2 | .10 | .0 | 3.40 | 24.00 | 1.62 | 5436.06 | 6.21 | 151.20 | 1249.6 |
| XSECTION 20 | RUNOFF | .13 | 7 | 2 | .10 | .0 | 3.40 | 24.00 | 1.56 | --- | 6.18 | 122.98 | 968.3 |
| XSECTION 20 | ADDHYD | .25 | 7 | 2 | .10 | .0 | 3.40 | 24.00 | 1.59 | 5436.69 | 6.20 | 273.60 | 1103.2 |
| TRUCTURE 6 | RESVOR | .25 | 7 | 2 | .10 | .0 | 3.40 | 24.00 | 1.59 | 5438.25 | 6.21 | 266.23 | 1073.5 |
| SECTION 18 | RUNOFF | .43 | 7 | 2 | .10 | .0 | 3.40 | 24.00 | 1.37 | --- | 6.24 | 315.71 | 739.4 |
| TRUCTURE 5 | RESVOR | .43 | 7 | 2 | .10 | .0 | 3.40 | 24.00 | 1.37 | 5437.74 | 6.28 | 310.42 | 727.0 |
| SECTION 16 | REACH | .43 | 7 | 2 | .10 | .0 | 3.40 | 24.00 | 1.37 | 5392.61 | 6.43 | 294.16 | 688.9 |
| XSECTION 16 | ADDHYD | .65 | 7 | 2 | .10 | .0 | 3.40 | 24.00 | 1.51 | 5393.56 | 6.37 | 522.85 | 805.6 |
| SECTION 16 | RUNOFF | .19 | 7 | 2 | .10 | .0 | 3.40 | 24.00 | 1.68 | --- | 6.20 | 192.79 | 1025.5 |
| SECTION 16 | ADDHYD | .44 | 7 | 2 | .10 | .0 | 3.40 | 24.00 | 1.63 | 5393.32 | 6.21 | 458.66 | 1052.0 |
| XSECTION 16 | ADDHYD | 1.09 | 7 | 2 | .10 | .0 | 3.40 | 24.00 | 1.56 | 5394.69 | 6.30 | 926.33 | 853.8 |
| TRUCTURE 54 | RESVOR | 1.09 | 7 | 2 | .10 | .0 | 3.40 | 24.00 | 1.56 | 5403.29 | 7.08 | 160.19 | 147.6 |
| SECTION 14 | REACH | 1.09 | 7 | 2 | .10 | .0 | 3.40 | 24.00 | 1.56 | 5368.22 | 7.21 | 159.96 | 147.4 |
| XSECTION 14 | RUNOFF | .09 | 7 | 2 | .10 | .0 | 3.40 | 24.00 | 2.13 | --- | 6.07 | 160.16 | 1740.8 |
| SECTION 14 | ADDHYD | 1.18 | 7 | 2 | .10 | .0 | 3.40 | 24.00 | 1.60 | 5368.44 | 6.18 | 191.83 | 163.0 |
| ALTERNATE 1 STORM 2 | | | | | | | | | | | | | |
| SECTION 24 | RUNOFF | .22 | 7 | 2 | .10 | .0 | 3.05 | 24.00 | 1.49 | --- | 6.14 | 227.85 | 1026.4 |
| STRUCTURE 7 | RESVOR | .22 | 7 | 2 | .10 | .0 | 3.05 | 24.00 | 1.49 | 5453.44 | 6.16 | 225.39 | 1015.3 |
| XSECTION 16 | REACH | .22 | 7 | 2 | .10 | .0 | 3.05 | 24.00 | 1.49 | 5392.24 | 6.30 | 209.12 | 942.0 |
| SECTION 22 | RUNOFF | .12 | 7 | 2 | .10 | .0 | 3.05 | 24.00 | 1.35 | --- | 6.09 | 128.76 | 1064.1 |
| TRUCTURE 9 | RESVOR | .12 | 7 | 2 | .10 | .0 | 3.05 | 24.00 | 1.37 | 5491.75 | 6.10 | 134.70 | 1113.2 |
| SECTION 20 | REACH | .12 | 7 | 2 | .10 | .0 | 3.05 | 24.00 | 1.34 | 5435.88 | 6.21 | 124.96 | 1032.7 |
| SECTION 20 | RUNOFF | .13 | 7 | 2 | .10 | .0 | 3.05 | 24.00 | 1.29 | --- | 6.19 | 100.03 | 787.7 |
| XSECTION 20 | ADDHYD | .25 | 7 | 2 | .10 | .0 | 3.05 | 24.00 | 1.31 | 5436.50 | 6.21 | 224.54 | 905.4 |
| STRUCTURE 6 | RESVOR | .25 | 7 | 2 | .10 | .0 | 3.05 | 24.00 | 1.32 | 5438.16 | 6.22 | 221.90 | 894.8 |
| SECTION 18 | RUNOFF | .43 | 7 | 2 | .10 | .0 | 3.05 | 24.00 | 1.12 | --- | 6.25 | 251.34 | 588.6 |
| STRUCTURE 5 | RESVOR | .43 | 7 | 2 | .10 | .0 | 3.05 | 24.00 | 1.11 | 5437.54 | 6.28 | 247.00 | 578.5 |

SUMMARY TABLE 1 - SELECTED RESULTS OF STANDARD AND EXECUTIVE CONTROL INSTRUCTIONS IN THE ORDER PERFORMED
(A STAR(*) AFTER THE PEAK DISCHARGE TIME AND RATE (CFS) VALUES INDICATES A FLAT TOP HYDROGRAPH
A QUESTION MARK(?) INDICATES A HYDROGRAPH WITH PEAK AS LAST POINT.)

| SECTION/ STRUCTURE ID | STANDARD CONTROL OPERATION | DRAINAGE AREA (SQ MI) | RAIN TABLE # | ANTEC MOIST COND | MAIN TIME INCREM (HR) | PRECIPITATION BEGIN (HR) | PRECIPITATION AMOUNT (IN) | PRECIPITATION DURATION (HR) | RUNOFF AMOUNT (IN) | PEAK DISCHARGE ELEVATION (FT) | PEAK DISCHARGE TIME (HR) | PEAK DISCHARGE RATE (CFS) | PEAK DISCHARGE RATE (CSM) |
|---|---|---|---|---|---|---|---|---|---|---|---|---|---|
| ALTERNATE 1 STORM 2 | | | | | | | | | | | | | |
| XSECTION 16 | REACH | .43 | 7 | 2 | .10 | .0 | 3.05 | 24.00 | 1.12 | 5392.33 | 6.45 | 230.74 | 540.4 |
| XSECTION 16 | ADDHYD | .65 | 7 | 2 | .10 | .0 | 3.05 | 24.00 | 1.25 | 5393.14 | 6.38 | 416.86 | 642.3 |
| SECTION 16 | RUNOFF | .19 | 7 | 2 | .10 | .0 | 3.05 | 24.00 | 1.40 | --- | 6.20 | 158.30 | 842.0 |
| SECTION 16 | ADDHYD | .44 | 7 | 2 | .10 | .0 | 3.05 | 24.00 | 1.35 | 5392.98 | 6.21 | 379.78 | 871.1 |
| XSECTION 16 | ADDHYD | 1.09 | 7 | 2 | .10 | .0 | 3.05 | 24.00 | 1.29 | 5394.17 | 6.31 | 740.69 | 682.7 |
| TRUCTURE 54 | RESVOR | 1.09 | 7 | 2 | .10 | .0 | 3.05 | 24.00 | 1.29 | 5402.19 | 7.14 | 133.56 | 123.1 |
| XSECTION 14 | REACH | 1.09 | 7 | 2 | .10 | .0 | 3.05 | 24.00 | 1.29 | 5368.03 | 7.28 | 133.53 | 123.1 |
| XSECTION 14 | RUNOFF | .09 | 7 | 2 | .10 | .0 | 3.05 | 24.00 | 1.82 | --- | 6.07 | 136.48 | 1483.5 |
| SECTION 14 | ADDHYD | 1.18 | 7 | 2 | .10 | .0 | 3.05 | 24.00 | 1.33 | 5368.21 | 6.19 | 158.96 | 135.1 |
| ALTERNATE 1 STORM 3 | | | | | | | | | | | | | |
| SECTION 24 | RUNOFF | .22 | 7 | 2 | .10 | .0 | 2.40 | 24.00 | .99 | --- | 6.15 | 145.67 | 656.2 |
| STRUCTURE 7 | RESVOR | .22 | 7 | 2 | .10 | .0 | 2.40 | 24.00 | .99 | 5453.07 | 6.18 | 145.04 | 653.3 |
| XSECTION 16 | REACH | .22 | 7 | 2 | .10 | .0 | 2.40 | 24.00 | .99 | 5391.78 | 6.33 | 130.43 | 587.5 |
| SECTION 22 | RUNOFF | .12 | 7 | 2 | .10 | .0 | 2.40 | 24.00 | .87 | --- | 6.10 | 80.86 | 668.3 |
| STRUCTURE 9 | RESVOR | .12 | 7 | 2 | .10 | .0 | 2.40 | 24.00 | .86 | 5491.39 | 6.10 | 76.61 | 633.1 |
| SECTION 20 | REACH | .12 | 7 | 2 | .10 | .0 | 2.40 | 24.00 | .88 | 5435.24 | 6.25 | 73.00 | 603.3 |
| SECTION 20 | RUNOFF | .13 | 7 | 2 | .10 | .0 | 2.40 | 24.00 | .82 | --- | 6.20 | 60.83 | 479.0 |
| XSECTION 20 | ADDHYD | .25 | 7 | 2 | .10 | .0 | 2.40 | 24.00 | .85 | 5435.92 | 6.23 | 131.97 | 532.1 |
| TRUCTURE 6 | RESVOR | .25 | 7 | 2 | .10 | .0 | 2.40 | 24.00 | .85 | 5437.86 | 6.26 | 130.45 | 526.0 |
| SECTION 18 | RUNOFF | .43 | 7 | 2 | .10 | .0 | 2.40 | 24.00 | .69 | --- | 6.27 | 142.99 | 334.9 |
| STRUCTURE 5 | RESVOR | .43 | 7 | 2 | .10 | .0 | 2.40 | 24.00 | .69 | 5437.22 | 6.35 | 141.63 | 331.7 |
| SECTION 16 | REACH | .43 | 7 | 2 | .10 | .0 | 2.40 | 24.00 | .69 | 5391.73 | 6.52 | 120.98 | 283.3 |
| XSECTION 16 | ADDHYD | .65 | 7 | 2 | .10 | .0 | 2.40 | 24.00 | .79 | 5392.32 | 6.44 | 228.16 | 351.6 |
| XSECTION 16 | RUNOFF | .19 | 7 | 2 | .10 | .0 | 2.40 | 24.00 | .91 | --- | 6.21 | 98.69 | 525.0 |
| SECTION 16 | ADDHYD | .44 | 7 | 2 | .10 | .0 | 2.40 | 24.00 | .87 | 5392.32 | 6.24 | 227.40 | 521.6 |
| XSECTION 16 | ADDHYD | 1.09 | 7 | 2 | .10 | .0 | 2.40 | 24.00 | .82 | 5393.10 | 6.33 | 407.50 | 375.6 |
| STRUCTURE 54 | RESVOR | 1.09 | 7 | 2 | .10 | .0 | 2.40 | 24.00 | .82 | 5399.74 | 7.11 | 109.67 | 101.1 |
| SECTION 14 | REACH | 1.09 | 7 | 2 | .10 | .0 | 2.40 | 24.00 | .82 | 5367.87 | 7.24 | 109.63 | 101.0 |
| XSECTION 14 | RUNOFF | .09 | 7 | 2 | .10 | .0 | 2.40 | 24.00 | 1.26 | --- | 6.08 | 93.78 | 1019.4 |
| XSECTION 14 | ADDHYD | 1.18 | 7 | 2 | .10 | .0 | 2.40 | 24.00 | .86 | 5367.91 | 7.23 | 115.17 | 97.9 |

UMMARY TABLE 2 - SELECTED MODIFIED ATT-KIN REACH ROUTINGS IN ORDER OF STANDARD EXECUTIVE CONTROL INSTRUCTIONS
(A STAR(*) AFTER VOLUME ABOVE BASE(IN) INDICATES A HYDROGRAPH TRUNCATED AT A VALUE EXCEEDING BASE + 10% OF PEAK
A QUESTION MARK(?) AFTER COEFF.(C) INDICATES PARAMETERS OUTSIDE ACCEPTABLE LIMITS, SEE PREVIOUS WARNINGS)

| SEC ID | REACH LENGTH (FT) | HYDROGRAPH INFLOW PEAK (CFS) | INFLOW TIME (HR) | OUTFLOW PEAK (CFS) | OUTFLOW TIME (HR) | OUTFLOW+ INTERV.AREA PEAK (CFS) | INTERV.AREA TIME (HR) | BASE-FLOW (CFS) | ROUTING PARAMETERS VOLUME ABOVE BASE (IN) | MAIN TIME INCR (HR) | ITER-ATION # | Q AND A EQUATION COEFF (X) | Q AND A EQUATION POWER (M) | LENGTH FACTOR (K*) | PEAK RATIO O/I (Q*) | S/Q @PEAK (K) (SEC) | ATT-KIN COEFF (C) | PEAK TRAVEL TIME STOR-AGE (HR) | PEAK TRAVEL TIME KINE-MATIC (HR) |
|---|---|---|---|---|---|---|---|---|---|---|---|---|---|---|---|---|---|---|---|
| ALTERNATE 1 STORM 1 | | | | | | | | | | | | | | | | | | | |
| 16 | 2900 | 266 | 6.2 | 255 | 6.3 | --- | --- | 0 | 1.78 | .10 | 1 | 1.27 | 1.40 | .067 | .957 | 357 | .67? | .10 | .10 |
| 20 | 2700 | 160 | 6.1 | 151 | 6.2 | 274 | 6.2 | 0 | 1.64 | .10 | 1 | 2.38 | 1.35 | .065 | .945 | 283 | .78? | .10 | .08 |
| 16 | 2900 | 310 | 6.3 | 292 | 6.4 | --- | --- | 0 | 1.37 | .10 | 1 | 1.28 | 1.39 | .045 | .941 | 343 | .69? | .10 | .10 |
| 14 | 2300 | 160 | 7.1 | 160 | 7.2 | 191 | 6.2 | 0 | 1.56 | .10 | 1 | 2.23 | 1.35 | .003 | .999 | 254 | .83? | .10 | .07 |
| ALTERNATE 1 STORM 2 | | | | | | | | | | | | | | | | | | | |
| 16 | 2900 | 221 | 6.2 | 209 | 6.3 | --- | --- | 0 | 1.49 | .10 | 1 | 1.26 | 1.40 | .071 | .945 | 374 | .65 | .10 | .10 |
| 20 | 2700 | 135 | 6.1 | 125 | 6.2 | 224 | 6.2 | 0 | 1.37 | .10 | 1 | 2.38 | 1.35 | .070 | .925 | 295 | .76? | .10 | .08 |
| 16 | 2900 | 246 | 6.3 | 226 | 6.4 | --- | --- | 0 | 1.11 | .10 | 1 | 1.27 | 1.40 | .048 | .918 | 364 | .66 | .10 | .10 |
| 14 | 2300 | 134 | 7.1 | 134 | 7.3 | 159 | 6.2 | 0 | 1.29 | .10 | 1 | 2.23 | 1.35 | .003 | 1.000 | 266 | .81? | .20 | .07 |
| ALTERNATE 1 STORM 3 | | | | | | | | | | | | | | | | | | | |
| 16 | 2900 | 144 | 6.2 | 129 | 6.3 | --- | --- | 0 | .99 | .10 | 1 | 1.26 | 1.40 | .082 | .897 | 422 | .60 | .10 | .12 |
| 20 | 2700 | 77 | 6.1 | 70 | 6.3 | 131 | 6.2 | 0 | .86 | .10 | 1 | 2.38 | 1.35 | .074 | .918 | 342 | .69? | .20 | .10 |
| 16 | 2900 | 133 | 6.3 | 120 | 6.5 | | | 0 | .69 | .10 | 1 | 1.26 | 1.40 | .050 | .902 | 432 | .59 | .20 | .12 |

```
                                        ---   ---                                                                  2.23
14   2300     110   7.1     110   7.2                          0      .82    .10    1          1.35    .005   .999    280  .78?   .10    .08
                                        115   7.2
```



UMMARY TABLE 3 - DISCHARGE (CFS) AT XSECTIONS AND STRUCTURES FOR ALL STORMS AND ALTERNATES

| XSECTION/ STRUCTURE ID | | DRAINAGE AREA (SQ MI) | STORM NUMBERS..... 1 | 2 | 3 |
|---|---|---|---|---|---|
| STRUCTURE 54 | | 1.09 | | | |
| | ALTERNATE 1 | | 160.19 | 133.56 | 109.67 |
| STRUCTURE 9 | | .12 | | | |
| | ALTERNATE 1 | | 159.97 | 134.70 | 76.61 |
| STRUCTURE 7 | | .22 | | | |
| | ALTERNATE 1 | | 271.90 | 225.39 | 145.04 |
| STRUCTURE 6 | | .25 | | | |
| | ALTERNATE 1 | | 266.23 | 221.90 | 130.45 |
| STRUCTURE 5 | | .43 | | | |
| | ALTERNATE 1 | | 310.42 | 247.00 | 141.63 |
| XSECTION 14 | | 1.18 | | | |
| | ALTERNATE 1 | | 191.83 | 158.96 | 115.17 |
| XSECTION 16 | | 1.09 | | | |
| | ALTERNATE 1 | | 926.33 | 740.69 | 407.50 |
| XSECTION 18 | | .43 | | | |
| | ALTERNATE 1 | | 315.71 | 251.34 | 142.99 |
| XSECTION 20 | | .25 | | | |
| | ALTERNATE 1 | | 273.60 | 224.54 | 131.97 |
| XSECTION 22 | | .12 | | | |
| | ALTERNATE 1 | | 156.29 | 128.76 | 80.86 |
| XSECTION 24 | | .22 | | | |
| | ALTERNATE 1 | | 274.90 | 227.85 | 145.67 |

1END OF  1 JOBS IN THIS RUN

# SECTION 3

## HEC-RAS Run – Pre Detention Conditions

HEC-RAS Version 2.0 April 1997
U.S. Army Corp of Engineers
Hydrologic Engineering Center
609 Second Street, Suite D
Davis, California 95616-4687
(916) 756-1104

```
X     X  XXXXXX    XXXX        XXXX       XX      XXXX
X     X  X       X    X      X   X     X  X    X
X     X  X       X           X   X    X    X   X
XXXXXXX  XXXX    X       XXX  XXXX     XXXXXX    XXXX
X     X  X       X           X  X     X    X        X
X     X  X       X    X      X   X    X    X        X
X     X  XXXXXX   XXXX       X    X   X    X   XXXXX
```

**********

ROJECT DATA
roject Title: CANON CITY LOMR-PRE DET. W/ EXIST. FEMA
Project File : expredev.prj
un Date and Time: 3/30/98 9:30:08 AM

Project in English units

roject Description:
RE DETENTION CONDITIONS WITH AS BUILT AND EXISTING FEMA CROSS SECTIONS
CITY OF CANON CITY LOMR
/26/98
JW

ROSS SECTION  RIVER: NE CANON DRAINAG
EACH: SUB-BASIN FROM N  RS: 11

ROSS SECTION OUTPUT  Profile #100 YR.

| | | | | | |
|---|---|---|---|---|---|
| W.S. Elev (ft) | 5437.82 | Element | Left OB | Channel | Right OB |
| Vel Head (ft) | 0.12 | Wt. n-Val. | 0.060 | 0.040 | 0.060 |
| E.G. Elev (ft) | 5437.94 | Reach Len. (ft) | 130.52 | 178.20 | 226.20 |
| Crit W.S. (ft) | | Flow Area (sq ft) | 70.99 | 190.17 | 185.92 |
| E.G. Slope (ft/ft) | 0.004687 | Area (sq ft) | 70.99 | 190.17 | 185.92 |
| Q Total (cfs) | 926.00 | Flow (cfs) | 89.23 | 617.52 | 219.25 |
| Top Width (ft) | 563.49 | Top Width (ft) | 111.19 | 131.80 | 320.50 |
| Vel Total (ft/s) | 2.07 | Avg. Vel. (ft/s) | 1.26 | 3.25 | 1.18 |
| Max Chl Dpth (ft) | 1.85 | Hydr. Depth (ft) | 0.64 | 1.44 | 0.58 |
| Conv. Total (cfs) | 13525.4 | Conv. (cfs) | 1303.3 | 9019.6 | 3202.5 |
| Length Wtd. (ft) | 182.35 | Wetted Per. (ft) | 111.23 | 131.82 | 320.51 |
| Min Ch El (ft) | 5435.97 | Shear (lb/sq ft) | 0.19 | 0.42 | 0.17 |
| Alpha | 1.75 | Stream Power (lb/ft s) | 0.23 | 1.37 | 0.20 |
| Frctn Loss (ft) | 0.04 | Cum Volume (acre-ft) | 23.12 | 21.02 | 28.89 |
| C & E Loss (ft) | 0.03 | Cum SA (acres) | 15.65 | 8.88 | 12.02 |

arning - The cross-section end points had to be extended vertically for the computed water surface.
arning - The conveyance ratio (upstream conveyance divided by downstream conveyance) is less
than 0.7 or greater than 1.4. This may indicate the need for additional cross sections.

CROSS SECTION OUTPUT  Profile #50 YR.

| | | | | | |
|---|---|---|---|---|---|
| W.S. Elev (ft) | 5437.74 | Element | Left OB | Channel | Right OB |
| Vel Head (ft) | 0.09 | Wt. n-Val. | 0.060 | 0.040 | 0.060 |
| E.G. Elev (ft) | 5437.83 | Reach Len. (ft) | 130.52 | 178.20 | 226.20 |
| Crit W.S. (ft) | | Flow Area (sq ft) | 62.12 | 179.55 | 160.27 |
| E.G. Slope (ft/ft) | 0.003944 | Area (sq ft) | 62.12 | 179.55 | 160.27 |
| Q Total (cfs) | 740.00 | Flow (cfs) | 66.67 | 514.74 | 158.59 |
| Top Width (ft) | 555.98 | Top Width (ft) | 108.36 | 131.80 | 315.83 |
| Vel Total (ft/s) | 1.84 | Avg. Vel. (ft/s) | 1.07 | 2.87 | 0.99 |
| Max Chl Dpth (ft) | 1.77 | Hydr. Depth (ft) | 0.57 | 1.36 | 0.51 |
| Conv. Total (cfs) | 11782.6 | Conv. (cfs) | 1061.5 | 8196.0 | 2525.1 |
| Length Wtd. (ft) | 181.89 | Wetted Per. (ft) | 108.37 | 131.82 | 315.84 |
| Min Ch El (ft) | 5435.97 | Shear (lb/sq ft) | 0.14 | 0.34 | 0.12 |
| Alpha | 1.78 | Stream Power (lb/ft s) | 0.15 | 0.96 | 0.12 |
| Frctn Loss (ft) | 0.03 | Cum Volume (acre-ft) | 18.31 | 18.95 | 23.81 |
| C & E Loss (ft) | 0.03 | Cum SA (acres) | 13.79 | 8.54 | 11.70 |

arning - The conveyance ratio (upstream conveyance divided by downstream conveyance) is less
than 0.7 or greater than 1.4. This may indicate the need for additional cross sections.

ROSS SECTION OUTPUT  Profile #10 YR.

| | | | | | |
|---|---|---|---|---|---|
| W.S. Elev (ft) | 5437.52 | Element | Left OB | Channel | Right OB |
| Vel Head (ft) | 0.05 | Wt. n-Val. | 0.060 | 0.040 | 0.060 |
| E.G. Elev (ft) | 5437.57 | Reach Len. (ft) | 130.52 | 178.20 | 226.20 |
| Crit W.S. (ft) | | Flow Area (sq ft) | 39.48 | 150.59 | 99.13 |
| E.G. Slope (ft/ft) | 0.002612 | Area (sq ft) | 39.48 | 150.59 | 99.13 |
| Q Total (cfs) | 408.00 | Flow (cfs) | 27.30 | 312.43 | 68.27 |
| Top Width (ft) | 476.44 | Top Width (ft) | 97.73 | 131.80 | 246.91 |
| Vel Total (ft/s) | 1.41 | Avg. Vel. (ft/s) | 0.69 | 2.07 | 0.69 |
| Max Chl Dpth (ft) | 1.55 | Hydr. Depth (ft) | 0.40 | 1.14 | 0.40 |
| Conv. Total (cfs) | 7983.6 | Conv. (cfs) | 534.2 | 6113.5 | 1336.0 |
| Length Wtd. (ft) | 181.24 | Wetted Per. (ft) | 97.74 | 131.82 | 246.92 |
| Min Ch El (ft) | 5435.97 | Shear (lb/sq ft) | 0.07 | 0.19 | 0.07 |
| Alpha | 1.71 | Stream Power (lb/ft s) | 0.05 | 0.39 | 0.05 |
| Frctn Loss (ft) | 0.01 | Cum Volume (acre-ft) | 11.15 | 14.57 | 13.45 |
| C & E Loss (ft) | 0.02 | Cum SA (acres) | 9.98 | 7.68 | 9.34 |

Warning - The conveyance ratio (upstream conveyance divided by downstream conveyance) is less
than 0.7 or greater than 1.4. This may indicate the need for additional cross sections.

CROSS SECTION  RIVER: NE CANON DRAINAG
REACH: SUB-BASIN FROM N  RS: 10

CROSS SECTION OUTPUT  Profile #100 YR.

| | | | | | |
|---|---|---|---|---|---|
| W.S. Elev (ft) | 5437.85 | Element | Left OB | Channel | Right OB |
| Vel Head (ft) | 0.01 | Wt. n-Val. | 0.060 | 0.040 | 0.060 |
| E.G. Elev (ft) | 5437.86 | Reach Len. (ft) | 117.59 | 123.73 | 133.26 |
| Crit W.S. (ft) | 5432.42 | Flow Area (sq ft) | 109.02 | 1262.58 | 222.34 |
| E.G. Slope (ft/ft) | 0.000076 | Area (sq ft) | 109.02 | 1262.58 | 222.34 |
| Q Total (cfs) | 926.00 | Flow (cfs) | 29.13 | 840.14 | 56.73 |
| Top Width (ft) | 685.34 | Top Width (ft) | 77.83 | 423.91 | 183.60 |
| Vel Total (ft/s) | 0.58 | Avg. Vel. (ft/s) | 0.27 | 0.67 | 0.26 |
| Max Chl Dpth (ft) | 8.85 | Hydr. Depth (ft) | 1.40 | 2.98 | 1.21 |

| | | | | | | |
|---|---|---|---|---|---|---|
| Conv. Total (cfs) | 106217.0 | Conv. (cfs) | 3341.0 | 96368.8 | 6507.3 | |
| Length Wtd. (ft) | 123.73 | Wetted Per. (ft) | 79.19 | 428.69 | 184.26 | |
| Min Ch El (ft) | 5429.00 | Shear (lb/sq ft) | 0.01 | 0.01 | 0.01 | |
| Alpha | 1.21 | Stream Power (lb/ft s) | 0.00 | 0.01 | 0.00 | |
| Frctn Loss (ft) | | Cum Volume (acre-ft) | 22.85 | 18.05 | 27.83 | |
| C & E Loss (ft) | | Cum SA (acres) | 15.36 | 7.74 | 10.71 | |

CROSS SECTION OUTPUT Profile #50 YR.

| | | | | | |
|---|---|---|---|---|---|
| W.S. Elev (ft) | 5437.77 | Element | Left OB | Channel | Right OB |
| Vel Head (ft) | 0.00 | Wt. n-Val. | 0.060 | 0.040 | 0.060 |
| E.G. Elev (ft) | 5437.78 | Reach Len. (ft) | 117.59 | 123.73 | 133.26 |
| Crit W.S. (ft) | 5431.98 | Flow Area (sq ft) | 102.67 | 1228.01 | 207.50 |
| E.G. Slope (ft/ft) | 0.000054 | Area (sq ft) | 102.67 | 1228.01 | 207.50 |
| Q Total (cfs) | 740.00 | Flow (cfs) | 22.18 | 674.48 | 43.35 |
| Top Width (ft) | 682.05 | Top Width (ft) | 77.83 | 423.91 | 180.31 |
| Vel Total (ft/s) | 0.48 | Avg. Vel. (ft/s) | 0.22 | 0.55 | 0.21 |
| Max Chl Dpth (ft) | 8.77 | Hydr. Depth (ft) | 1.32 | 2.90 | 1.15 |
| Conv. Total (cfs) | 100950.4 | Conv. (cfs) | 3025.2 | 92011.6 | 5913.6 |
| Length Wtd. (ft) | 123.73 | Wetted Per. (ft) | 79.11 | 428.69 | 180.88 |
| Min Ch El (ft) | 5429.00 | Shear (lb/sq ft) | 0.00 | 0.01 | 0.00 |
| Alpha | 1.21 | Stream Power (lb/ft s) | 0.00 | 0.01 | 0.00 |
| Frctn Loss (ft) | | Cum Volume (acre-ft) | 18.07 | 16.07 | 22.85 |
| C & E Loss (ft) | | Cum SA (acres) | 13.51 | 7.40 | 10.42 |

CROSS SECTION OUTPUT Profile #10 YR.

| | | | | | |
|---|---|---|---|---|---|
| W.S. Elev (ft) | 5437.54 | Element | Left OB | Channel | Right OB |
| Vel Head (ft) | 0.00 | Wt. n-Val. | 0.060 | 0.040 | 0.060 |
| E.G. Elev (ft) | 5437.55 | Reach Len. (ft) | 117.59 | 123.73 | 133.26 |
| Crit W.S. (ft) | 5431.05 | Flow Area (sq ft) | 84.92 | 1131.35 | 167.48 |
| E.G. Slope (ft/ft) | 0.000022 | Area (sq ft) | 84.92 | 1131.35 | 167.48 |
| Q Total (cfs) | 408.00 | Flow (cfs) | 10.37 | 376.80 | 20.83 |
| Top Width (ft) | 672.03 | Top Width (ft) | 77.83 | 423.91 | 170.29 |
| Vel Total (ft/s) | 0.29 | Avg. Vel. (ft/s) | 0.12 | 0.33 | 0.12 |
| Max Chl Dpth (ft) | 8.54 | Hydr. Depth (ft) | 1.09 | 2.67 | 0.98 |
| Conv. Total (cfs) | 86906.2 | Conv. (cfs) | 2209.2 | 80260.1 | 4437.0 |
| Length Wtd. (ft) | 123.73 | Wetted Per. (ft) | 78.88 | 428.69 | 170.61 |
| Min Ch El (ft) | 5429.00 | Shear (lb/sq ft) | 0.00 | 0.00 | 0.00 |
| Alpha | 1.19 | Stream Power (lb/ft s) | 0.00 | 0.00 | 0.00 |
| Frctn Loss (ft) | | Cum Volume (acre-ft) | 10.97 | 11.95 | 12.76 |
| C & E Loss (ft) | | Cum SA (acres) | 9.72 | 6.55 | 8.26 |

CULVERT RIVER: NE CANON DRAINAG
REACH: SUB-BASIN FROM N RS: 9.5

CULVERT OUTPUT Profile #100 YR.
Culvert ID : HIGH STREET

| | | | |
|---|---|---|---|
| Culv Q (cfs) | 113.20 | Culv Vel In (ft/s) | 13.39 |
| # Barrels | 1 | Culv Vel Out (ft/s) | 14.31 |
| Q Barrel (cfs) | 113.20 | Culv Inv El Up (ft) | 5429.00 |
| W.S. US. (ft) | 5437.85 | Culv Inv El Dn (ft) | 5428.85 |
| E.G. US. (ft) | 5437.86 | Culv Frctn Ls (ft) | 2.15 |
| Delta WS (ft) | 9.83 | Culv Ext Lss (ft) | 5.29 |
| Delta EG (ft) | 8.84 | Culv Ent Lss (ft) | 1.39 |

```
* E.G. IC (ft)        *  5437.86 * Q Weir (cfs)        *   812.86 *
* E.G. OC (ft)        *  5437.54 * Weir Sta Lft (ft)   *     7.81 *
* Culv WS In (ft)     *  5431.58 * Weir Sta Rgt (ft)   *   708.26 *
* Culv WS Out (ft)    *  5431.14 * Weir Submerg        *     0.00 *
* Culv Nml Depth (ft) *     2.58 * Weir Max Depth (ft) *     1.07 *
* Culv Crt Depth (ft) *     2.58 * Weir Avg Depth (ft) *     0.57 *
* Culv Ful Lngh (ft)  *    30.00 * Min Top Rd (ft)     *  5436.79 *
**********************************************************************

Warning -  During subcritical analysis, while trying to calculate culvert and weir flow, the program
           could not get a balance of energy within the specified tolerance and number of trials.  The
           program used the solution with the minimum error.
Warning - Since the culvert has supercritical flow, the program should be run in mixed flow in order to
           check if the cross section downstream of the culvert has supercritical flow.
Note - The normal depth exceeds the height of the culvert.  The program assumes that the normal
           depth is equal to the height of the culvert.
Note - Culvert critical depth exceeds the height of the culvert.
Note - The flow in the culvert is entirely supercritical.

CULVERT OUTPUT    Profile #50 YR.
Culvert ID : HIGH STREET
**********************************************************************
* Culv Q (cfs)        *   112.53 * Culv Vel In (ft/s)  *    13.31 *
* # Barrels           *        1 * Culv Vel Out (ft/s) *    14.20 *
* Q Barrel (cfs)      *   112.53 * Culv Inv El Up (ft) *  5429.00 *
* W.S. US. (ft)       *  5437.77 * Culv Inv El Dn (ft) *  5428.85 *
* E.G. US. (ft)       *  5437.78 * Culv Frctn Ls (ft)  *     2.13 *
* Delta WS (ft)       *    10.06 * Culv Ext Lss (ft)   *     5.67 *
* Delta EG (ft)       *     9.18 * Culv Ent Lss (ft)   *     1.38 *
* E.G. IC (ft)        *  5437.78 * Q Weir (cfs)        *   627.47 *
* E.G. OC (ft)        *  5437.47 * Weir Sta Lft (ft)   *    27.73 *
* Culv WS In (ft)     *  5431.58 * Weir Sta Rgt (ft)   *   708.26 *
* Culv WS Out (ft)    *  5431.14 * Weir Submerg        *     0.00 *
* Culv Nml Depth (ft) *     2.58 * Weir Max Depth (ft) *     0.97 *
* Culv Crt Depth (ft) *     2.58 * Weir Avg Depth (ft) *     0.49 *
* Culv Ful Lngh (ft)  *    30.00 * Min Top Rd (ft)     *  5436.79 *
**********************************************************************

Warning -  During subcritical analysis, while trying to calculate culvert and weir flow, the program
           could not get a balance of energy within the specified tolerance and number of trials.  The
           program used the solution with the minimum error.
Warning - Since the culvert has supercritical flow, the program should be run in mixed flow in order to
           check if the cross section downstream of the culvert has supercritical flow.
Note - The normal depth exceeds the height of the culvert.  The program assumes that the normal
           depth is equal to the height of the culvert.
Note - Culvert critical depth exceeds the height of the culvert.
Note - The flow in the culvert is entirely supercritical.

CULVERT OUTPUT    Profile #10 YR.
Culvert ID : HIGH STREET
**********************************************************************
* Culv Q (cfs)        *   110.67 * Culv Vel In (ft/s)  *    13.09 *
* # Barrels           *        1 * Culv Vel Out (ft/s) *    13.92 *
* Q Barrel (cfs)      *   110.67 * Culv Inv El Up (ft) *  5429.00 *
* W.S. US. (ft)       *  5437.54 * Culv Inv El Dn (ft) *  5428.85 *
* E.G. US. (ft)       *  5437.55 * Culv Frctn Ls (ft)  *     2.06 *
* Delta WS (ft)       *    10.44 * Culv Ext Lss (ft)   *     6.44 *
* Delta EG (ft)       *     9.83 * Culv Ent Lss (ft)   *     1.33 *
* E.G. IC (ft)        *  5437.55 * Q Weir (cfs)        *   296.69 *
* E.G. OC (ft)        *  5437.27 * Weir Sta Lft (ft)   *    71.09 *
```

| | | | | | |
|---|---|---|---|---|---|
| Culv WS In (ft) | 5431.58 | Weir Sta Rgt (ft) | 708.26 | | |
| Culv WS Out (ft) | 5431.15 | Weir Submerg | 0.00 | | |
| Culv Nml Depth (ft) | 2.58 | Weir Max Depth (ft) | 0.75 | | |
| Culv Crt Depth (ft) | 2.58 | Weir Avg Depth (ft) | 0.32 | | |
| Culv Ful Lngh (ft) | 30.00 | Min Top Rd (ft) | 5436.79 | | |

rning - During subcritical analysis, while trying to calculate culvert and weir flow, the program could not get a balance of energy within the specified tolerance and number of trials. The program used the solution with the minimum error.

rning - Since the culvert has supercritical flow, the program should be run in mixed flow in order to check if the cross section downstream of the culvert has supercritical flow.

Note - The normal depth exceeds the height of the culvert. The program assumes that the normal depth is equal to the height of the culvert.

ote - Culvert critical depth exceeds the height of the culvert.

Note - The flow in the culvert is entirely supercritical.

OSS SECTION RIVER: NE CANON DRAINAG

REACH: SUB-BASIN FROM N RS: 9

CROSS SECTION OUTPUT Profile #100 YR.

| | | | Left OB | Channel | Right OB |
|---|---|---|---|---|---|
| W.S. Elev (ft) | 5428.02 | Element | | | |
| Vel Head (ft) | 0.99 | Wt. n-Val. | | 0.040 | |
| E.G. Elev (ft) | 5429.02 | Reach Len. (ft) | 921.60 | 738.87 | 563.85 |
| Crit W.S. (ft) | 5428.02 | Flow Area (sq ft) | | 115.75 | |
| E.G. Slope (ft/ft) | 0.019118 | Area (sq ft) | | 115.75 | |
| Q Total (cfs) | 926.00 | Flow (cfs) | | 926.00 | |
| Top Width (ft) | 58.66 | Top Width (ft) | | 58.66 | |
| Vel Total (ft/s) | 8.00 | Avg. Vel. (ft/s) | | 8.00 | |
| Max Chl Dpth (ft) | 3.42 | Hydr. Depth (ft) | | 1.97 | |
| Conv. Total (cfs) | 6697.1 | Conv. (cfs) | | 6697.1 | |
| Length Wtd. (ft) | 738.87 | Wetted Per. (ft) | | 59.54 | |
| Min Ch El (ft) | 5424.60 | Shear (lb/sq ft) | | 2.32 | |
| Alpha | 1.00 | Stream Power (lb/ft s) | | 18.56 | |
| Frctn Loss (ft) | 9.97 | Cum Volume (acre-ft) | 22.70 | 16.09 | 27.49 |
| C & E Loss (ft) | 0.15 | Cum SA (acres) | 15.26 | 7.06 | 10.43 |

rning - The energy equation could not be balanced within the specified number of iterations. The program used critical depth for the water surface and continued on with the calculations.

Warning - The energy loss was greater than 1.0 ft (0.3 m). between the current and previous cross section. This may indicate the need for additional cross sections.

rning - During the standard step iterations, when the assumed water surface was set equal to critical depth, the calculated water surface came back below critical depth. This indicates that there is not a valid subcritical answer. The program defaulted to critical depth.

rning - The parabolic search method failed to converge on critical depth. The program will try the cross section slice/secant method to find critical depth.

OSS SECTION OUTPUT Profile #50 YR.

| | | | Left OB | Channel | Right OB |
|---|---|---|---|---|---|
| W.S. Elev (ft) | 5427.71 | Element | | | |
| Vel Head (ft) | 0.89 | Wt. n-Val. | | 0.040 | |
| E.G. Elev (ft) | 5428.60 | Reach Len. (ft) | 921.60 | 738.87 | 563.85 |
| Crit W.S. (ft) | 5427.71 | Flow Area (sq ft) | | 97.60 | |
| E.G. Slope (ft/ft) | 0.020194 | Area (sq ft) | | 97.60 | |
| Q Total (cfs) | 740.00 | Flow (cfs) | | 740.00 | |
| Top Width (ft) | 55.91 | Top Width (ft) | | 55.91 | |
| Vel Total (ft/s) | 7.58 | Avg. Vel. (ft/s) | | 7.58 | |

| | | | | | | | | | |
|---|---|---|---|---|---|---|---|---|---|
| Max Chl Dpth (ft) | 3.11 | Hydr. Depth (ft) | | | 1.75 | | |
| Conv. Total (cfs) | 5207.4 | Conv. (cfs) | | | 5207.4 | | |
| Length Wtd. (ft) | 738.87 | Wetted Per. (ft) | | | 56.71 | | |
| Min Ch El (ft) | 5424.60 | Shear (lb/sq ft) | | | 2.17 | | |
| Alpha | 1.00 | Stream Power (lb/ft s) | | | 16.45 | | |
| Frctn Loss (ft) | 10.73 | Cum Volume (acre-ft) | | 17.93 | 14.19 | | 22.53 |
| C & E Loss (ft) | 0.13 | Cum SA (acres) | | 13.41 | 6.72 | | 10.14 |

rning - The energy equation could not be balanced within the specified number of iterations. The program used critical depth for the water surface and continued on with the calculations.
Warning - The energy loss was greater than 1.0 ft (0.3 m). between the current and previous cross section. This may indicate the need for additional cross sections.
rning - During the standard step iterations, when the assumed water surface was set equal to critical depth, the calculated water surface came back below critical depth. This indicates that there is not a valid subcritical answer. The program defaulted to critical depth.

OSS SECTION OUTPUT Profile #10 YR.

| | | | | | | |
|---|---|---|---|---|---|---|
| W.S. Elev (ft) | 5427.11 | Element | Left OB | Channel | Right OB | |
| Vel Head (ft) | 0.61 | Wt. n-Val. | | 0.040 | | |
| E.G. Elev (ft) | 5427.71 | Reach Len. (ft) | 921.60 | 738.87 | 563.85 | |
| Crit W.S. (ft) | 5427.11 | Flow Area (sq ft) | | 65.17 | | |
| E.G. Slope (ft/ft) | 0.021432 | Area (sq ft) | | 65.17 | | |
| Q Total (cfs) | 408.00 | Flow (cfs) | | 408.00 | | |
| Top Width (ft) | 52.16 | Top Width (ft) | | 52.16 | | |
| Vel Total (ft/s) | 6.26 | Avg. Vel. (ft/s) | | 6.26 | | |
| Max Chl Dpth (ft) | 2.51 | Hydr. Depth (ft) | | 1.25 | | |
| Conv. Total (cfs) | 2787.0 | Conv. (cfs) | | 2787.0 | | |
| Length Wtd. (ft) | 738.87 | Wetted Per. (ft) | | 52.77 | | |
| Min Ch El (ft) | 5424.60 | Shear (lb/sq ft) | | 1.65 | | |
| Alpha | 1.00 | Stream Power (lb/ft s) | | 10.34 | | |
| Frctn Loss (ft) | 12.60 | Cum Volume (acre-ft) | 10.85 | 10.25 | 12.50 | |
| C & E Loss (ft) | 0.08 | Cum SA (acres) | 9.62 | 5.87 | 8.00 | |

rning - The energy equation could not be balanced within the specified number of iterations. The program used critical depth for the water surface and continued on with the calculations.
Warning - The energy loss was greater than 1.0 ft (0.3 m). between the current and previous cross section. This may indicate the need for additional cross sections.
rning - During the standard step iterations, when the assumed water surface was set equal to critical depth, the calculated water surface came back below critical depth. This indicates that there is not a valid subcritical answer. The program defaulted to critical depth.
rning - The parabolic search method failed to converge on critical depth. The program will try the cross section slice/secant method to find critical depth.

OSS SECTION RIVER: NE CANON DRAINAG
ACH: SUB-BASIN FROM N RS: 8

OSS SECTION OUTPUT Profile #100 YR.

| | | | | | | |
|---|---|---|---|---|---|---|
| W.S. Elev (ft) | 5414.57 | Element | Left OB | Channel | Right OB | |
| Vel Head (ft) | 0.50 | Wt. n-Val. | | 0.040 | | |
| E.G. Elev (ft) | 5415.07 | Reach Len. (ft) | 621.48 | 659.67 | 748.44 | |
| Crit W.S. (ft) | 5414.19 | Flow Area (sq ft) | | 162.95 | | |
| E.G. Slope (ft/ft) | 0.010022 | Area (sq ft) | | 162.95 | | |
| Q Total (cfs) | 926.00 | Flow (cfs) | | 926.00 | | |
| Top Width (ft) | 84.76 | Top Width (ft) | | 84.76 | | |
| Vel Total (ft/s) | 5.68 | Avg. Vel. (ft/s) | | 5.68 | | |

| | | | | | | | | | |
|---|---|---|---|---|---|---|---|---|---|
| Max Chl Dpth (ft) | * | 4.13 | * Hydr. Depth (ft) | * | | * | 1.92 | * | |
| Conv. Total (cfs) | * | 9249.8 | * Conv. (cfs) | * | | * | 9249.8 | * | |
| Length Wtd. (ft) | * | 668.89 | * Wetted Per. (ft) | * | | * | 86.27 | * | |
| Min Ch El (ft) | * | 5410.44 | * Shear (lb/sq ft) | * | | * | 1.18 | * | |
| Alpha | * | 1.00 | * Stream Power (lb/ft s) | * | | * | 6.72 | * | |
| Frctn Loss (ft) | * | 5.26 | * Cum Volume (acre-ft) | * | 22.70 | * | 13.73 | * | 27.49 * |
| C & E Loss (ft) | * | 0.01 | * Cum SA (acres) | * | 15.26 | * | 5.84 | * | 10.43 * |

rning - The energy loss was greater than 1.0 ft (0.3 m). between the current and previous cross section. This may indicate the need for additional cross sections.

Warning - The parabolic search method failed to converge on critical depth. The program will try the cross section slice/secant method to find critical depth.

CROSS SECTION OUTPUT Profile #50 YR.

| | | | | | | | | | |
|---|---|---|---|---|---|---|---|---|---|
| W.S. Elev (ft) | * | 5414.27 | * Element | * | Left OB | * | Channel | * | Right OB * |
| Vel Head (ft) | * | 0.45 | * Wt. n-Val. | * | | * | 0.040 | * | |
| E.G. Elev (ft) | * | 5414.72 | * Reach Len. (ft) | * | 621.48 | * | 659.67 | * | 748.44 * |
| Crit W.S. (ft) | * | | * Flow Area (sq ft) | * | | * | 137.55 | * | |
| E.G. Slope (ft/ft) | * | 0.010951 | * Area (sq ft) | * | | * | 137.55 | * | |
| Q Total (cfs) | * | 740.00 | * Flow (cfs) | * | | * | 740.00 | * | |
| Top Width (ft) | * | 83.09 | * Top Width (ft) | * | | * | 83.09 | * | |
| Vel Total (ft/s) | * | 5.38 | * Avg. Vel. (ft/s) | * | | * | 5.38 | * | |
| Max Chl Dpth (ft) | * | 3.83 | * Hydr. Depth (ft) | * | | * | 1.66 | * | |
| Conv. Total (cfs) | * | 7071.5 | * Conv. (cfs) | * | | * | 7071.5 | * | |
| Length Wtd. (ft) | * | 667.40 | * Wetted Per. (ft) | * | | * | 84.48 | * | |
| Min Ch El (ft) | * | 5410.44 | * Shear (lb/sq ft) | * | | * | 1.11 | * | |
| Alpha | * | 1.00 | * Stream Power (lb/ft s) | * | | * | 5.99 | * | |
| Frctn Loss (ft) | * | 5.32 | * Cum Volume (acre-ft) | * | 17.93 | * | 12.19 | * | 22.53 * |
| C & E Loss (ft) | * | 0.01 | * Cum SA (acres) | * | 13.41 | * | 5.54 | * | 10.14 * |

rning - The energy loss was greater than 1.0 ft (0.3 m). between the current and previous cross section. This may indicate the need for additional cross sections.

OSS SECTION OUTPUT Profile #10 YR.

| | | | | | | | | | |
|---|---|---|---|---|---|---|---|---|---|
| W.S. Elev (ft) | * | 5413.64 | * Element | * | Left OB | * | Channel | * | Right OB * |
| Vel Head (ft) | * | 0.34 | * Wt. n-Val. | * | | * | 0.040 | * | |
| E.G. Elev (ft) | * | 5413.98 | * Reach Len. (ft) | * | 621.48 | * | 659.67 | * | 748.44 * |
| Crit W.S. (ft) | * | 5413.47 | * Flow Area (sq ft) | * | | * | 86.95 | * | |
| E.G. Slope (ft/ft) | * | 0.013886 | * Area (sq ft) | * | | * | 86.95 | * | |
| Q Total (cfs) | * | 408.00 | * Flow (cfs) | * | | * | 408.00 | * | |
| Top Width (ft) | * | 77.15 | * Top Width (ft) | * | | * | 77.15 | * | |
| Vel Total (ft/s) | * | 4.69 | * Avg. Vel. (ft/s) | * | | * | 4.69 | * | |
| Max Chl Dpth (ft) | * | 3.20 | * Hydr. Depth (ft) | * | | * | 1.13 | * | |
| Conv. Total (cfs) | * | 3462.4 | * Conv. (cfs) | * | | * | 3462.4 | * | |
| Length Wtd. (ft) | * | 663.26 | * Wetted Per. (ft) | * | | * | 78.34 | * | |
| Min Ch El (ft) | * | 5410.44 | * Shear (lb/sq ft) | * | | * | 0.96 | * | |
| Alpha | * | 1.00 | * Stream Power (lb/ft s) | * | | * | 4.51 | * | |
| Frctn Loss (ft) | * | 5.52 | * Cum Volume (acre-ft) | * | 10.85 | * | 8.96 | * | 12.50 * |
| C & E Loss (ft) | * | 0.00 | * Cum SA (acres) | * | 9.62 | * | 4.77 | * | 8.00 * |

Warning - The conveyance ratio (upstream conveyance divided by downstream conveyance) is less than 0.7 or greater than 1.4. This may indicate the need for additional cross sections.

rning - The energy loss was greater than 1.0 ft (0.3 m). between the current and previous cross section. This may indicate the need for additional cross sections.

arning - The parabolic search method failed to converge on critical depth. The program will try the

cross section slice/secant method to find critical depth.

CROSS SECTION RIVER: NE CANON DRAINAG
REACH: SUB-BASIN FROM N RS: 7

CROSS SECTION OUTPUT Profile #100 YR.

| | | | | | |
|---|---|---|---|---|---|
| W.S. Elev (ft) | 5409.34 | Element | Left OB | Channel | Right OB |
| Vel Head (ft) | 0.46 | Wt. n-Val. | | 0.040 | 0.060 |
| E.G. Elev (ft) | 5409.80 | Reach Len. (ft) | 1000.00 | 988.80 | 1029.20 |
| Crit W.S. (ft) | 5408.63 | Flow Area (sq ft) | | 122.62 | 75.41 |
| E.G. Slope (ft/ft) | 0.006272 | Area (sq ft) | | 122.62 | 75.41 |
| Q Total (cfs) | 926.00 | Flow (cfs) | | 733.67 | 192.33 |
| Top Width (ft) | 90.44 | Top Width (ft) | | 39.88 | 50.56 |
| Vel Total (ft/s) | 4.68 | Avg. Vel. (ft/s) | | 5.98 | 2.55 |
| Max Chl Dpth (ft) | 5.99 | Hydr. Depth (ft) | | 3.07 | 1.49 |
| Conv. Total (cfs) | 11692.8 | Conv. (cfs) | | 9264.2 | 2428.6 |
| Length Wtd. (ft) | 993.00 | Wetted Per. (ft) | | 42.28 | 50.85 |
| Min Ch El (ft) | 5403.35 | Shear (lb/sq ft) | | 1.14 | 0.58 |
| Alpha | 1.36 | Stream Power (lb/ft s) | | 6.79 | 1.48 |
| Frctn Loss (ft) | 10.59 | Cum Volume (acre-ft) | 22.70 | 11.57 | 26.84 |
| C & E Loss (ft) | 0.02 | Cum SA (acres) | 15.26 | 4.90 | 10.00 |

Warning - Divided flow computed for this cross-section.
Warning - The conveyance ratio (upstream conveyance divided by downstream conveyance) is less than 0.7 or greater than 1.4. This may indicate the need for additional cross sections.
Warning - The energy loss was greater than 1.0 ft (0.3 m). between the current and previous cross section. This may indicate the need for additional cross sections.

CROSS SECTION OUTPUT Profile #50 YR.

| | | | | | |
|---|---|---|---|---|---|
| W.S. Elev (ft) | 5408.96 | Element | Left OB | Channel | Right OB |
| Vel Head (ft) | 0.42 | Wt. n-Val. | | 0.040 | 0.060 |
| E.G. Elev (ft) | 5409.39 | Reach Len. (ft) | 1000.00 | 988.80 | 1029.20 |
| Crit W.S. (ft) | 5408.31 | Flow Area (sq ft) | | 108.18 | 57.45 |
| E.G. Slope (ft/ft) | 0.006134 | Area (sq ft) | | 108.18 | 57.45 |
| Q Total (cfs) | 740.00 | Flow (cfs) | | 611.11 | 128.89 |
| Top Width (ft) | 83.71 | Top Width (ft) | | 37.75 | 45.96 |
| Vel Total (ft/s) | 4.47 | Avg. Vel. (ft/s) | | 5.65 | 2.24 |
| Max Chl Dpth (ft) | 5.61 | Hydr. Depth (ft) | | 2.87 | 1.25 |
| Conv. Total (cfs) | 9448.4 | Conv. (cfs) | | 7802.8 | 1645.7 |
| Length Wtd. (ft) | 992.32 | Wetted Per. (ft) | | 39.99 | 46.19 |
| Min Ch El (ft) | 5403.35 | Shear (lb/sq ft) | | 1.04 | 0.48 |
| Alpha | 1.36 | Stream Power (lb/ft s) | | 5.85 | 1.07 |
| Frctn Loss (ft) | 10.46 | Cum Volume (acre-ft) | 17.93 | 10.33 | 22.04 |
| C & E Loss (ft) | 0.02 | Cum SA (acres) | 13.41 | 4.63 | 9.75 |

Warning - Divided flow computed for this cross-section.
Warning - The conveyance ratio (upstream conveyance divided by downstream conveyance) is less than 0.7 or greater than 1.4. This may indicate the need for additional cross sections.
Warning - The energy loss was greater than 1.0 ft (0.3 m). between the current and previous cross section. This may indicate the need for additional cross sections.

CROSS SECTION OUTPUT Profile #10 YR.

| | | | | | |
|---|---|---|---|---|---|
| W.S. Elev (ft) | 5408.13 | Element | Left OB | Channel | Right OB |
| Vel Head (ft) | 0.33 | Wt. n-Val. | | 0.040 | 0.060 |

```
E.G. Elev (ft)        *  5408.46 * Reach Len. (ft)        *  1000.00 *   988.80 *  1029.20 *
* Crit W.S. (ft)      *  5407.31 * Flow Area (sq ft)      *          *    78.66 *    23.49 *
E.G. Slope (ft/ft)    * 0.005557 * Area (sq ft)          *          *    78.66 *    23.49 *
Q Total (cfs)         *   408.00 * Flow (cfs)            *          *   375.00 *    33.00 *
* Top Width (ft)      *    68.26 * Top Width (ft)        *          *    32.96 *    35.30 *
* Vel Total (ft/s)    *     3.99 * Avg. Vel. (ft/s)      *          *     4.77 *     1.40 *
Max Chl Dpth (ft)     *     4.78 * Hydr. Depth (ft)      *          *     2.39 *     0.67 *
Conv. Total (cfs)     *   5473.3 * Conv. (cfs)           *          *   5030.5 *    442.8 *
* Length Wtd. (ft)    *   990.43 * Wetted Per. (ft)      *          *    34.82 *    35.40 *
Min Ch El (ft)        *  5403.35 * Shear (lb/sq ft)      *          *     0.78 *     0.23 *
Alpha                 *     1.32 * Stream Power (lb/ft s) *         *     3.74 *     0.32 *
* Frctn Loss (ft)     *    10.17 * Cum Volume (acre-ft)  *    10.85 *     7.70 *    12.30 *
C & E Loss (ft)       *     0.01 * Cum SA (acres)        *     9.62 *     3.94 *     7.69 *
*****************************************************************************************

Warning - Divided flow computed for this cross-section.
rning - The conveyance ratio (upstream conveyance divided by downstream conveyance) is less
        than 0.7 or greater than 1.4.  This may indicate the need for additional cross sections.
Warning - The energy loss was greater than 1.0 ft (0.3 m). between the current and previous cross
        section.  This may indicate the need for additional cross sections.

CROSS SECTION          RIVER: NE CANON DRAINAG
REACH: SUB-BASIN FROM N   RS: 6


CROSS SECTION OUTPUT    Profile #100 YR.
*****************************************************************************************
W.S. Elev (ft)        *  5398.52 * Element             *  Left OB *  Channel * Right OB *
* Vel Head (ft)       *     0.66 * Wt. n-Val.          *          *    0.040 *          *
E.G. Elev (ft)        *  5399.19 * Reach Len. (ft)     *   225.86 *   492.60 *   258.94 *
Crit W.S. (ft)        *  5398.52 * Flow Area (sq ft)   *          *   141.55 *          *
* E.G. Slope (ft/ft)  * 0.022028 * Area (sq ft)        *          *   141.55 *          *
* Q Total (cfs)       *   926.00 * Flow (cfs)          *          *   926.00 *          *
Top Width (ft)        *   108.77 * Top Width (ft)      *          *   108.77 *          *
Vel Total (ft/s)      *     6.54 * Avg. Vel. (ft/s)    *          *     6.54 *          *
* Max Chl Dpth (ft)   *     3.85 * Hydr. Depth (ft)    *          *     1.30 *          *
Conv. Total (cfs)     *   6239.1 * Conv. (cfs)         *          *   6239.1 *          *
Length Wtd. (ft)      *   446.16 * Wetted Per. (ft)    *          *   109.51 *          *
* Min Ch El (ft)      *  5394.67 * Shear (lb/sq ft)    *          *     1.78 *          *
Alpha                 *     1.00 * Stream Power (lb/ft s) *         *    11.63 *          *
Frctn Loss (ft)       *     0.15 * Cum Volume (acre-ft)  *    22.70 *     8.57 *    25.95 *
C & E Loss (ft)       *     0.20 * Cum SA (acres)        *    15.26 *     3.21 *     9.40 *
*****************************************************************************************

rning - The energy equation could not be balanced within the specified number of iterations.  The
        program used critical depth for the water surface and continued on with the calculations.
rning - The velocity head has changed by more than 0.5 ft (0.15 m).  This may indicate the need
        for additional cross sections.
Warning - The conveyance ratio (upstream conveyance divided by downstream conveyance) is less
        than 0.7 or greater than 1.4.  This may indicate the need for additional cross sections.
rning - The energy loss was greater than 1.0 ft (0.3 m). between the current and previous cross
        section.  This may indicate the need for additional cross sections.
Warning - During the standard step iterations, when the assumed water surface was set equal to
        critical depth, the calculated water surface came back below critical depth.  This indicates
        that there is not a valid subcritical answer.  The program defaulted to critical depth.

ROSS SECTION OUTPUT    Profile #50 YR.
*****************************************************************************************
W.S. Elev (ft)        *  5398.28 * Element             *  Left OB *  Channel * Right OB *
Vel Head (ft)         *     0.62 * Wt. n-Val.          *          *    0.040 *          *
```

| | | | | | |
|---|---|---|---|---|---|
| E.G. Elev (ft) | 5398.90 | Reach Len. (ft) | 225.86 | 492.60 | 258.94 |
| Crit W.S. (ft) | 5398.28 | Flow Area (sq ft) | | 117.17 | |
| E.G. Slope (ft/ft) | 0.022332 | Area (sq ft) | | 117.17 | |
| Q Total (cfs) | 740.00 | Flow (cfs) | | 740.00 | |
| Top Width (ft) | 95.83 | Top Width (ft) | | 95.83 | |
| Vel Total (ft/s) | 6.32 | Avg. Vel. (ft/s) | | 6.32 | |
| Max Chl Dpth (ft) | 3.61 | Hydr. Depth (ft) | | 1.22 | |
| Conv. Total (cfs) | 4951.8 | Conv. (cfs) | | 4951.8 | |
| Length Wtd. (ft) | 449.59 | Wetted Per. (ft) | | 96.55 | |
| Min Ch El (ft) | 5394.67 | Shear (lb/sq ft) | | 1.69 | |
| Alpha | 1.00 | Stream Power (lb/ft s) | | 10.69 | |
| Frctn Loss (ft) | 0.12 | Cum Volume (acre-ft) | 17.93 | 7.77 | 21.36 |
| C & E Loss (ft) | 0.18 | Cum SA (acres) | 13.41 | 3.11 | 9.20 |

Warning - The energy equation could not be balanced within the specified number of iterations. The program used critical depth for the water surface and continued on with the calculations.
Warning - The velocity head has changed by more than 0.5 ft (0.15 m). This may indicate the need for additional cross sections.
Warning - The conveyance ratio (upstream conveyance divided by downstream conveyance) is less than 0.7 or greater than 1.4. This may indicate the need for additional cross sections.
Warning - The energy loss was greater than 1.0 ft (0.3 m). between the current and previous cross section. This may indicate the need for additional cross sections.
Warning - During the standard step iterations, when the assumed water surface was set equal to critical depth, the calculated water surface came back below critical depth. This indicates that there is not a valid subcritical answer. The program defaulted to critical depth.

CROSS SECTION OUTPUT Profile #10 YR.

| | | | | | |
|---|---|---|---|---|---|
| W.S. Elev (ft) | 5397.80 | Element | Left OB | Channel | Right OB |
| Vel Head (ft) | 0.47 | Wt. n-Val. | | 0.040 | |
| E.G. Elev (ft) | 5398.27 | Reach Len. (ft) | 225.86 | 492.60 | 258.94 |
| Crit W.S. (ft) | 5397.80 | Flow Area (sq ft) | | 74.12 | |
| E.G. Slope (ft/ft) | 0.024982 | Area (sq ft) | | 74.12 | |
| Q Total (cfs) | 408.00 | Flow (cfs) | | 408.00 | |
| Top Width (ft) | 80.97 | Top Width (ft) | | 80.97 | |
| Vel Total (ft/s) | 5.50 | Avg. Vel. (ft/s) | | 5.50 | |
| Max Chl Dpth (ft) | 3.13 | Hydr. Depth (ft) | | 0.92 | |
| Conv. Total (cfs) | 2581.4 | Conv. (cfs) | | 2581.4 | |
| Length Wtd. (ft) | 458.30 | Wetted Per. (ft) | | 81.64 | |
| Min Ch El (ft) | 5394.67 | Shear (lb/sq ft) | | 1.42 | |
| Alpha | 1.00 | Stream Power (lb/ft s) | | 7.79 | |
| Frctn Loss (ft) | 0.06 | Cum Volume (acre-ft) | 10.85 | 5.97 | 12.03 |
| C & E Loss (ft) | 0.14 | Cum SA (acres) | 9.62 | 2.65 | 7.28 |

Warning - The energy equation could not be balanced within the specified number of iterations. The program used critical depth for the water surface and continued on with the calculations.
Warning - The conveyance ratio (upstream conveyance divided by downstream conveyance) is less than 0.7 or greater than 1.4. This may indicate the need for additional cross sections.
Warning - The energy loss was greater than 1.0 ft (0.3 m). between the current and previous cross section. This may indicate the need for additional cross sections.
Warning - During the standard step iterations, when the assumed water surface was set equal to critical depth, the calculated water surface came back below critical depth. This indicates that there is not a valid subcritical answer. The program defaulted to critical depth.

CROSS SECTION RIVER: NE CANON DRAINAG
REACH: SUB-BASIN FROM N RS: 5.8

CROSS SECTION OUTPUT  Profile #100 YR.

| W.S. Elev (ft) | 5396.97 | Element | Left OB | Channel | Right OB |
|---|---|---|---|---|---|
| Vel Head (ft) | 0.01 | Wt. n-Val. | 0.060 | 0.040 | 0.060 |
| E.G. Elev (ft) | 5396.98 | Reach Len. (ft) | 83.16 | 83.32 | 83.48 |
| Crit W.S. (ft) | 5391.63 | Flow Area (sq ft) | 193.46 | 474.94 | 783.27 |
| E.G. Slope (ft/ft) | 0.000097 | Area (sq ft) | 193.46 | 474.94 | 783.27 |
| Q Total (cfs) | 926.00 | Flow (cfs) | 62.07 | 566.73 | 297.20 |
| Top Width (ft) | 607.56 | Top Width (ft) | 127.26 | 77.71 | 402.59 |
| Vel Total (ft/s) | 0.64 | Avg. Vel. (ft/s) | 0.32 | 1.19 | 0.38 |
| Max Chl Dpth (ft) | 9.62 | Hydr. Depth (ft) | 1.52 | 6.11 | 1.95 |
| Conv. Total (cfs) | 94131.2 | Conv. (cfs) | 6309.4 | 57610.3 | 30211.5 |
| Length Wtd. (ft) | 83.32 | Wetted Per. (ft) | 128.02 | 80.49 | 402.98 |
| Min Ch El (ft) | 5387.35 | Shear (lb/sq ft) | 0.01 | 0.04 | 0.01 |
| Alpha | 2.27 | Stream Power (lb/ft s) | 0.00 | 0.04 | 0.00 |
| Frctn Loss (ft) | | Cum Volume (acre-ft) | 22.20 | 5.08 | 23.62 |
| C & E Loss (ft) | | Cum SA (acres) | 14.93 | 2.16 | 8.20 |

OSS SECTION OUTPUT  Profile #50 YR.

| W.S. Elev (ft) | 5396.78 | Element | Left OB | Channel | Right OB |
|---|---|---|---|---|---|
| Vel Head (ft) | 0.01 | Wt. n-Val. | 0.060 | 0.040 | 0.060 |
| E.G. Elev (ft) | 5396.80 | Reach Len. (ft) | 83.16 | 83.32 | 83.48 |
| Crit W.S. (ft) | 5391.24 | Flow Area (sq ft) | 169.97 | 460.59 | 709.10 |
| E.G. Slope (ft/ft) | 0.000075 | Area (sq ft) | 169.97 | 460.59 | 709.10 |
| Q Total (cfs) | 740.00 | Flow (cfs) | 44.06 | 473.84 | 222.10 |
| Top Width (ft) | 606.11 | Top Width (ft) | 127.26 | 77.71 | 401.14 |
| Vel Total (ft/s) | 0.55 | Avg. Vel. (ft/s) | 0.26 | 1.03 | 0.31 |
| Max Chl Dpth (ft) | 9.43 | Hydr. Depth (ft) | 1.34 | 5.93 | 1.77 |
| Conv. Total (cfs) | 85488.2 | Conv. (cfs) | 5089.9 | 54739.9 | 25658.4 |
| Length Wtd. (ft) | 83.32 | Wetted Per. (ft) | 127.84 | 80.49 | 401.51 |
| Min Ch El (ft) | 5387.35 | Shear (lb/sq ft) | 0.01 | 0.03 | 0.01 |
| Alpha | 2.33 | Stream Power (lb/ft s) | 0.00 | 0.03 | 0.00 |
| Frctn Loss (ft) | | Cum Volume (acre-ft) | 17.49 | 4.51 | 19.25 |
| C & E Loss (ft) | | Cum SA (acres) | 13.08 | 2.13 | 8.01 |

CROSS SECTION OUTPUT  Profile #10 YR.

| W.S. Elev (ft) | 5396.38 | Element | Left OB | Channel | Right OB |
|---|---|---|---|---|---|
| Vel Head (ft) | 0.01 | Wt. n-Val. | 0.060 | 0.040 | 0.060 |
| E.G. Elev (ft) | 5396.38 | Reach Len. (ft) | 83.16 | 83.32 | 83.48 |
| Crit W.S. (ft) | 5390.24 | Flow Area (sq ft) | 119.27 | 429.14 | 546.85 |
| E.G. Slope (ft/ft) | 0.000036 | Area (sq ft) | 119.27 | 429.14 | 546.85 |
| Q Total (cfs) | 408.00 | Flow (cfs) | 17.74 | 290.71 | 99.55 |
| Top Width (ft) | 596.35 | Top Width (ft) | 118.12 | 77.71 | 400.52 |
| Vel Total (ft/s) | 0.37 | Avg. Vel. (ft/s) | 0.15 | 0.68 | 0.18 |
| Max Chl Dpth (ft) | 9.03 | Hydr. Depth (ft) | 1.01 | 5.52 | 1.37 |
| Conv. Total (cfs) | 68281.2 | Conv. (cfs) | 2968.2 | 48652.1 | 16660.9 |
| Length Wtd. (ft) | 83.32 | Wetted Per. (ft) | 118.41 | 80.49 | 400.77 |
| Min Ch El (ft) | 5387.35 | Shear (lb/sq ft) | 0.00 | 0.01 | 0.00 |
| Alpha | 2.42 | Stream Power (lb/ft s) | 0.00 | 0.01 | 0.00 |
| Frctn Loss (ft) | | Cum Volume (acre-ft) | 10.54 | 3.12 | 10.40 |
| C & E Loss (ft) | | Cum SA (acres) | 9.31 | 1.75 | 6.09 |

LVERT  RIVER: NE CANON DRAINAG
EACH: SUB-BASIN FROM N  RS: 5.5

CULVERT OUTPUT Profile #100 YR.
Culvert ID : SOUTH STREET

| | | | | |
|---|---|---|---|---|
| Culv Q (cfs) | 213.79 | Culv Vel In (ft/s) | | 10.89 |
| # Barrels | 1 | Culv Vel Out (ft/s) | | 10.89 |
| Q Barrel (cfs) | 213.79 | Culv Inv El Up (ft) | | 5387.35 |
| W.S. US. (ft) | 5396.97 | Culv Inv El Dn (ft) | | 5386.70 |
| E.G. US. (ft) | 5396.98 | Culv Frctn Ls (ft) | | 1.49 |
| Delta WS (ft) | 4.24 | Culv Ext Lss (ft) | | 1.43 |
| Delta EG (ft) | 3.85 | Culv Ent Lss (ft) | | 0.92 |
| E.G. IC (ft) | 5395.27 | Q Weir (cfs) | | 712.21 |
| E.G. OC (ft) | 5396.98 | Weir Sta Lft (ft) | | 264.75 |
| Culv WS In (ft) | 5392.35 | Weir Sta Rgt (ft) | | 607.56 |
| Culv WS Out (ft) | 5391.70 | Weir Submerg | | 0.00 |
| Culv Nml Depth (ft) | | Weir Max Depth (ft) | | 1.19 |
| Culv Crt Depth (ft) | 4.16 | Weir Avg Depth (ft) | | 0.83 |
| Culv Ful Lngh (ft) | 65.00 | Min Top Rd (ft) | | 5395.78 |

CULVERT OUTPUT Profile #50 YR.
Culvert ID : SOUTH STREET

| | | | | |
|---|---|---|---|---|
| Culv Q (cfs) | 218.81 | Culv Vel In (ft/s) | | 11.14 |
| # Barrels | 1 | Culv Vel Out (ft/s) | | 11.14 |
| Q Barrel (cfs) | 218.81 | Culv Inv El Up (ft) | | 5387.35 |
| W.S. US. (ft) | 5396.78 | Culv Inv El Dn (ft) | | 5386.70 |
| E.G. US. (ft) | 5396.80 | Culv Frctn Ls (ft) | | 1.56 |
| Delta WS (ft) | 4.45 | Culv Ext Lss (ft) | | 1.60 |
| Delta EG (ft) | 4.13 | Culv Ent Lss (ft) | | 0.96 |
| E.G. IC (ft) | 5395.48 | Q Weir (cfs) | | 521.19 |
| E.G. OC (ft) | 5396.80 | Weir Sta Lft (ft) | | 285.26 |
| Culv WS In (ft) | 5392.35 | Weir Sta Rgt (ft) | | 607.35 |
| Culv WS Out (ft) | 5391.70 | Weir Submerg | | 0.00 |
| Culv Nml Depth (ft) | | Weir Max Depth (ft) | | 1.02 |
| Culv Crt Depth (ft) | 4.20 | Weir Avg Depth (ft) | | 0.70 |
| Culv Ful Lngh (ft) | 65.00 | Min Top Rd (ft) | | 5395.78 |

CULVERT OUTPUT Profile #10 YR.
Culvert ID : SOUTH STREET

| | | | | |
|---|---|---|---|---|
| Culv Q (cfs) | 229.21 | Culv Vel In (ft/s) | | 11.67 |
| # Barrels | 1 | Culv Vel Out (ft/s) | | 11.91 |
| Q Barrel (cfs) | 229.21 | Culv Inv El Up (ft) | | 5387.35 |
| W.S. US. (ft) | 5396.38 | Culv Inv El Dn (ft) | | 5386.70 |
| E.G. US. (ft) | 5396.38 | Culv Frctn Ls (ft) | | 1.69 |
| Delta WS (ft) | 4.94 | Culv Ext Lss (ft) | | 2.02 |
| Delta EG (ft) | 4.76 | Culv Ent Lss (ft) | | 1.06 |
| E.G. IC (ft) | 5395.94 | Q Weir (cfs) | | 178.79 |
| E.G. OC (ft) | 5396.38 | Weir Sta Lft (ft) | | 341.52 |
| Culv WS In (ft) | 5392.35 | Weir Sta Rgt (ft) | | 606.09 |
| Culv WS Out (ft) | 5391.44 | Weir Submerg | | 0.00 |
| Culv Nml Depth (ft) | 5.00 | Weir Max Depth (ft) | | 0.61 |
| Culv Crt Depth (ft) | 4.28 | Weir Avg Depth (ft) | | 0.39 |
| Culv Ful Lngh (ft) | 52.45 | Min Top Rd (ft) | | 5395.78 |

Note - The normal depth exceeds the height of the culvert. The program assumes that the normal depth is equal to the height of the culvert.

CROSS SECTION RIVER: NE CANON DRAINAG
EACH: SUB-BASIN FROM N RS: 5

CROSS SECTION OUTPUT Profile #100 YR.

| | | | | | |
|---|---|---|---|---|---|
| W.S. Elev (ft) | 5392.73 | Element | Left OB | Channel | Right OB |
| Vel Head (ft) | 0.41 | Wt. n-Val. | | 0.040 | |
| E.G. Elev (ft) | 5393.14 | Reach Len. (ft) | 516.42 | 295.74 | 215.52 |
| Crit W.S. (ft) | | Flow Area (sq ft) | | 180.37 | |
| E.G. Slope (ft/ft) | 0.004176 | Area (sq ft) | | 180.37 | |
| Q Total (cfs) | 926.00 | Flow (cfs) | | 926.00 | |
| Top Width (ft) | 53.43 | Top Width (ft) | | 53.43 | |
| Vel Total (ft/s) | 5.13 | Avg. Vel. (ft/s) | | 5.13 | |
| Max Chl Dpth (ft) | 6.53 | Hydr. Depth (ft) | | 3.38 | |
| Conv. Total (cfs) | 14329.6 | Conv. (cfs) | | 14329.6 | |
| Length Wtd. (ft) | 295.84 | Wetted Per. (ft) | | 57.67 | |
| Min Ch El (ft) | 5386.20 | Shear (lb/sq ft) | | 0.82 | |
| Alpha | 1.00 | Stream Power (lb/ft s) | | 4.19 | |
| Frctn Loss (ft) | 2.22 | Cum Volume (acre-ft) | 22.02 | 4.46 | 22.87 |
| C & E Loss (ft) | 0.03 | Cum SA (acres) | 14.81 | 2.03 | 7.82 |

Warning - The conveyance ratio (upstream conveyance divided by downstream conveyance) is less than 0.7 or greater than 1.4. This may indicate the need for additional cross sections.
rning - The energy loss was greater than 1.0 ft (0.3 m). between the current and previous cross section. This may indicate the need for additional cross sections.

OSS SECTION OUTPUT Profile #50 YR.

| | | | | | |
|---|---|---|---|---|---|
| W.S. Elev (ft) | 5392.34 | Element | Left OB | Channel | Right OB |
| Vel Head (ft) | 0.33 | Wt. n-Val. | | 0.040 | |
| E.G. Elev (ft) | 5392.67 | Reach Len. (ft) | 516.42 | 295.74 | 215.52 |
| Crit W.S. (ft) | | Flow Area (sq ft) | | 160.16 | |
| E.G. Slope (ft/ft) | 0.003693 | Area (sq ft) | | 160.16 | |
| Q Total (cfs) | 740.00 | Flow (cfs) | | 740.00 | |
| Top Width (ft) | 50.58 | Top Width (ft) | | 50.58 | |
| Vel Total (ft/s) | 4.62 | Avg. Vel. (ft/s) | | 4.62 | |
| Max Chl Dpth (ft) | 6.14 | Hydr. Depth (ft) | | 3.17 | |
| Conv. Total (cfs) | 12176.3 | Conv. (cfs) | | 12176.3 | |
| Length Wtd. (ft) | 295.74 | Wetted Per. (ft) | | 54.71 | |
| Min Ch El (ft) | 5386.20 | Shear (lb/sq ft) | | 0.68 | |
| Alpha | 1.00 | Stream Power (lb/ft s) | | 3.12 | |
| Frctn Loss (ft) | 2.07 | Cum Volume (acre-ft) | 17.33 | 3.91 | 18.57 |
| C & E Loss (ft) | 0.03 | Cum SA (acres) | 12.96 | 2.01 | 7.63 |

Warning - The conveyance ratio (upstream conveyance divided by downstream conveyance) is less than 0.7 or greater than 1.4. This may indicate the need for additional cross sections.
rning - The energy loss was greater than 1.0 ft (0.3 m). between the current and previous cross section. This may indicate the need for additional cross sections.

OSS SECTION OUTPUT Profile #10 YR.

| | | | | | |
|---|---|---|---|---|---|
| W.S. Elev (ft) | 5391.44 | Element | Left OB | Channel | Right OB |
| Vel Head (ft) | 0.19 | Wt. n-Val. | | 0.040 | |
| E.G. Elev (ft) | 5391.62 | Reach Len. (ft) | 516.42 | 295.74 | 215.52 |
| Crit W.S. (ft) | | Flow Area (sq ft) | | 117.39 | |
| E.G. Slope (ft/ft) | 0.002643 | Area (sq ft) | | 117.39 | |

| | | | | | | | | | |
|---|---|---|---|---|---|---|---|---|---|
| Q Total (cfs) | * | 408.00 | * Flow (cfs) | * | | * | 408.00 | * | |
| * Top Width (ft) | * | 43.94 | * Top Width (ft) | * | | * | 43.94 | * | |
| Vel Total (ft/s) | * | 3.48 | * Avg. Vel. (ft/s) | * | | * | 3.48 | * | |
| Max Chl Dpth (ft) | * | 5.24 | * Hydr. Depth (ft) | * | | * | 2.67 | * | |
| * Conv. Total (cfs) | * | 7935.6 | * Conv. (cfs) | * | | * | 7935.6 | * | |
| * Length Wtd. (ft) | * | 295.74 | * Wetted Per. (ft) | * | | * | 47.82 | * | |
| Min Ch El (ft) | * | 5386.20 | * Shear (lb/sq ft) | * | | * | 0.41 | * | |
| Alpha | * | 1.00 | * Stream Power (lb/ft s) | * | | * | 1.41 | * | |
| * Frctn Loss (ft) | * | 1.76 | * Cum Volume (acre-ft) | * | 10.43 | * | 2.60 | * | 9.88 * |
| C & E Loss (ft) | * | 0.04 | * Cum SA (acres) | * | 9.20 | * | 1.63 | * | 5.70 * |

Warning - The conveyance ratio (upstream conveyance divided by downstream conveyance) is less than 0.7 or greater than 1.4. This may indicate the need for additional cross sections.
Warning - The energy loss was greater than 1.0 ft (0.3 m). between the current and previous cross section. This may indicate the need for additional cross sections.

CROSS SECTION RIVER: NE CANON DRAINAG
REACH: SUB-BASIN FROM N RS: 4

CROSS SECTION OUTPUT Profile #100 YR.

| | | | | | | | | | |
|---|---|---|---|---|---|---|---|---|---|
| W.S. Elev (ft) | * | 5390.20 | * Element | * | Left OB | * | Channel | * | Right OB * |
| Vel Head (ft) | * | 0.69 | * Wt. n-Val. | * | 0.060 | * | 0.040 | * | 0.060 * |
| * E.G. Elev (ft) | * | 5390.89 | * Reach Len. (ft) | * | 897.07 | * | 965.75 | * | 906.29 * |
| Crit W.S. (ft) | * | 5390.14 | * Flow Area (sq ft) | * | 1.37 | * | 138.84 | * | 0.40 * |
| E.G. Slope (ft/ft) | * | 0.017363 | * Area (sq ft) | * | 1.37 | * | 138.84 | * | 0.40 * |
| * Q Total (cfs) | * | 926.00 | * Flow (cfs) | * | 0.97 | * | 924.75 | * | 0.28 * |
| * Top Width (ft) | * | 108.32 | * Top Width (ft) | * | 18.30 | * | 86.11 | * | 3.92 * |
| Vel Total (ft/s) | * | 6.59 | * Avg. Vel. (ft/s) | * | 0.71 | * | 6.66 | * | 0.71 * |
| * Max Chl Dpth (ft) | * | 4.20 | * Hydr. Depth (ft) | * | 0.07 | * | 1.61 | * | 0.10 * |
| * Conv. Total (cfs) | * | 7027.4 | * Conv. (cfs) | * | 7.4 | * | 7017.9 | * | 2.2 * |
| Length Wtd. (ft) | * | 945.05 | * Wetted Per. (ft) | * | 18.30 | * | 87.48 | * | 3.92 * |
| Min Ch El (ft) | * | 5386.00 | * Shear (lb/sq ft) | * | 0.08 | * | 1.72 | * | 0.11 * |
| * Alpha | * | 1.02 | * Stream Power (lb/ft s) | * | 0.06 | * | 11.46 | * | 0.08 * |
| Frctn Loss (ft) | * | 13.03 | * Cum Volume (acre-ft) | * | 22.01 | * | 3.37 | * | 22.87 * |
| C & E Loss (ft) | * | 0.10 | * Cum SA (acres) | * | 14.70 | * | 1.56 | * | 7.81 * |

Warning - Divided flow computed for this cross-section.
Warning - The energy loss was greater than 1.0 ft (0.3 m). between the current and previous cross section. This may indicate the need for additional cross sections.
Warning - The parabolic search method failed to converge on critical depth. The program will try the cross section slice/secant method to find critical depth.

CROSS SECTION OUTPUT Profile #50 YR.

| | | | | | | | | | |
|---|---|---|---|---|---|---|---|---|---|
| * W.S. Elev (ft) | * | 5389.98 | * Element | * | Left OB | * | Channel | * | Right OB * |
| * Vel Head (ft) | * | 0.60 | * Wt. n-Val. | * | | * | 0.040 | * | |
| E.G. Elev (ft) | * | 5390.57 | * Reach Len. (ft) | * | 897.07 | * | 965.75 | * | 906.29 * |
| Crit W.S. (ft) | * | 5389.90 | * Flow Area (sq ft) | * | | * | 119.51 | * | |
| * E.G. Slope (ft/ft) | * | 0.018095 | * Area (sq ft) | * | | * | 119.51 | * | |
| Q Total (cfs) | * | 740.00 | * Flow (cfs) | * | | * | 740.00 | * | |
| Top Width (ft) | * | 85.28 | * Top Width (ft) | * | | * | 85.28 | * | |
| * Vel Total (ft/s) | * | 6.19 | * Avg. Vel. (ft/s) | * | | * | 6.19 | * | |
| * Max Chl Dpth (ft) | * | 3.98 | * Hydr. Depth (ft) | * | | * | 1.40 | * | |
| Conv. Total (cfs) | * | 5501.1 | * Conv. (cfs) | * | | * | 5501.1 | * | |
| * Length Wtd. (ft) | * | 946.51 | * Wetted Per. (ft) | * | | * | 86.65 | * | |
| * Min Ch El (ft) | * | 5386.00 | * Shear (lb/sq ft) | * | | * | 1.56 | * | |

```
 Alpha                *     1.00 * Stream Power (lb/ft s) *         *     9.65 *         *
* Frctn Loss (ft)      *    12.90 * Cum Volume (acre-ft)   *   17.33 *     2.96 *    18.57 *
* C & E Loss (ft)      *     0.08 * Cum SA (acres)         *   12.96 *     1.55 *     7.63 *
 ********************************************************************************************

Warning - The energy loss was greater than 1.0 ft (0.3 m). between the current and previous cross
              section.  This may indicate the need for additional cross sections.
 rning - The parabolic search method failed to converge on critical depth.  The program will try the
              cross section slice/secant method to find critical depth.

 OSS SECTION OUTPUT    Profile #10 YR.
********************************************************************************************
* W.S. Elev (ft)       *  5389.28 * Element              *  Left OB *  Channel * Right OB *
 Vel Head (ft)        *     0.55 * Wt. n-Val.           *          *    0.040 *          *
 E.G. Elev (ft)       *  5389.83 * Reach Len. (ft)      *   897.07 *   965.75 *   906.29 *
* Crit W.S. (ft)       *  5389.27 * Flow Area (sq ft)    *          *    68.69 *          *
 E.G. Slope (ft/ft)   * 0.023546 * Area (sq ft)         *          *    68.69 *          *
 Q Total (cfs)        *   408.00 * Flow (cfs)           *          *   408.00 *          *
* Top Width (ft)       *    63.26 * Top Width (ft)      *          *    63.26 *          *
* Vel Total (ft/s)     *     5.94 * Avg. Vel. (ft/s)    *          *     5.94 *          *
 Max Chl Dpth (ft)    *     3.28 * Hydr. Depth (ft)    *          *     1.09 *          *
* Conv. Total (cfs)    *   2658.9 * Conv. (cfs)         *          *   2658.9 *          *
* Length Wtd. (ft)     *   951.07 * Wetted Per. (ft)    *          *    64.58 *          *
 Min Ch El (ft)       *  5386.00 * Shear (lb/sq ft)     *          *     1.56 *          *
 Alpha                *     1.00 * Stream Power (lb/ft s) *         *     9.29 *          *
* Frctn Loss (ft)      *    12.49 * Cum Volume (acre-ft)   *   10.43 *     1.97 *     9.88 *
 C & E Loss (ft)      *     0.08 * Cum SA (acres)         *    9.20 *     1.27 *     5.70 *
 ********************************************************************************************

Warning - The conveyance ratio (upstream conveyance divided by downstream conveyance) is less
              than 0.7 or greater than 1.4.  This may indicate the need for additional cross sections.
arning - The energy loss was greater than 1.0 ft (0.3 m). between the current and previous cross
              section.  This may indicate the need for additional cross sections.

 OSS SECTION          RIVER: NE CANON DRAINAG
REACH: SUB-BASIN FROM N   RS: 3


ROSS SECTION OUTPUT    Profile #100 YR.
********************************************************************************************
 W.S. Elev (ft)       *  5377.40 * Element              *  Left OB *  Channel * Right OB *
 Vel Head (ft)        *     0.36 * Wt. n-Val.           *    0.060 *    0.040 *    0.060 *
* E.G. Elev (ft)       *  5377.76 * Reach Len. (ft)      *  1376.63 *   575.56 *   416.06 *
 Crit W.S. (ft)       *  5377.40 * Flow Area (sq ft)    *   232.53 *    50.31 *    30.38 *
 E.G. Slope (ft/ft)   * 0.011274 * Area (sq ft)         *   232.53 *    50.31 *    30.38 *
* Q Total (cfs)        *   926.00 * Flow (cfs)           *   507.70 *   361.46 *    56.85 *
* Top Width (ft)       *   377.96 * Top Width (ft)      *   307.33 *    20.03 *    50.60 *
 Vel Total (ft/s)     *     2.96 * Avg. Vel. (ft/s)    *     2.18 *     7.18 *     1.87 *
 Max Chl Dpth (ft)    *     3.40 * Hydr. Depth (ft)    *     0.76 *     2.51 *     0.60 *
* Conv. Total (cfs)    *   8721.1 * Conv. (cfs)         *   4781.5 *   3404.2 *    535.4 *
 Length Wtd. (ft)     *   728.18 * Wetted Per. (ft)    *   307.34 *    20.47 *    50.63 *
 Min Ch El (ft)       *  5374.00 * Shear (lb/sq ft)     *     0.53 *     1.73 *     0.42 *
* Alpha                *     2.63 * Stream Power (lb/ft s) *     1.16 *    12.43 *     0.79 *
 Frctn Loss (ft)      *     0.11 * Cum Volume (acre-ft)   *    19.60 *     1.28 *    22.55 *
 C & E Loss (ft)      *     0.11 * Cum SA (acres)         *    11.35 *     0.38 *     7.24 *
********************************************************************************************

 rning - The energy equation could not be balanced within the specified number of iterations.  The
              program used critical depth for the water surface and continued on with the calculations.
Warning - The conveyance ratio (upstream conveyance divided by downstream conveyance) is less
```

than 0.7 or greater than 1.4. This may indicate the need for additional cross sections.
Warning - The energy loss was greater than 1.0 ft (0.3 m). between the current and previous cross
section. This may indicate the need for additional cross sections.
rning - During the standard step iterations, when the assumed water surface was set equal to
critical depth, the calculated water surface came back below critical depth. This indicates
that there is not a valid subcritical answer. The program defaulted to critical depth.

OSS SECTION OUTPUT Profile #50 YR.

| | | | | | |
|---|---|---|---|---|---|
| W.S. Elev (ft) | 5377.26 | Element | Left OB | Channel | Right OB |
| Vel Head (ft) | 0.34 | Wt. n-Val. | 0.060 | 0.040 | 0.060 |
| E.G. Elev (ft) | 5377.60 | Reach Len. (ft) | 1376.63 | 575.56 | 416.06 |
| Crit W.S. (ft) | 5377.26 | Flow Area (sq ft) | 191.72 | 47.55 | 24.06 |
| E.G. Slope (ft/ft) | 0.010637 | Area (sq ft) | 191.72 | 47.55 | 24.06 |
| Q Total (cfs) | 740.00 | Flow (cfs) | 377.53 | 319.61 | 42.86 |
| Top Width (ft) | 344.53 | Top Width (ft) | 283.23 | 20.03 | 41.27 |
| Vel Total (ft/s) | 2.81 | Avg. Vel. (ft/s) | 1.97 | 6.72 | 1.78 |
| Max Chl Dpth (ft) | 3.26 | Hydr. Depth (ft) | 0.68 | 2.37 | 0.58 |
| Conv. Total (cfs) | 7175.0 | Conv. (cfs) | 3660.5 | 3098.9 | 415.6 |
| Length Wtd. (ft) | 703.93 | Wetted Per. (ft) | 283.24 | 20.47 | 41.30 |
| Min Ch El (ft) | 5374.00 | Shear (lb/sq ft) | 0.45 | 1.54 | 0.39 |
| Alpha | 2.74 | Stream Power (lb/ft s) | 0.89 | 10.37 | 0.69 |
| Frctn Loss (ft) | 0.12 | Cum Volume (acre-ft) | 15.35 | 1.11 | 18.32 |
| C & E Loss (ft) | 0.10 | Cum SA (acres) | 10.04 | 0.38 | 7.20 |

rning - The energy equation could not be balanced within the specified number of iterations. The
program used critical depth for the water surface and continued on with the calculations.
Warning - The conveyance ratio (upstream conveyance divided by downstream conveyance) is less
than 0.7 or greater than 1.4. This may indicate the need for additional cross sections.
rning - The energy loss was greater than 1.0 ft (0.3 m). between the current and previous cross
section. This may indicate the need for additional cross sections.
Warning - During the standard step iterations, when the assumed water surface was set equal to
critical depth, the calculated water surface came back below critical depth. This indicates
that there is not a valid subcritical answer. The program defaulted to critical depth.
Warning - The parabolic search method failed to converge on critical depth. The program will try the
cross section slice/secant method to find critical depth.

CROSS SECTION OUTPUT Profile #10 YR.

| | | | | | |
|---|---|---|---|---|---|
| W.S. Elev (ft) | 5376.98 | Element | Left OB | Channel | Right OB |
| Vel Head (ft) | 0.28 | Wt. n-Val. | 0.060 | 0.040 | 0.060 |
| E.G. Elev (ft) | 5377.26 | Reach Len. (ft) | 1376.63 | 575.56 | 416.06 |
| Crit W.S. (ft) | 5376.98 | Flow Area (sq ft) | 115.63 | 41.95 | 15.16 |
| E.G. Slope (ft/ft) | 0.008376 | Area (sq ft) | 115.63 | 41.95 | 15.16 |
| Q Total (cfs) | 408.00 | Flow (cfs) | 152.08 | 230.13 | 25.79 |
| Top Width (ft) | 304.87 | Top Width (ft) | 261.58 | 20.03 | 23.26 |
| Vel Total (ft/s) | 2.36 | Avg. Vel. (ft/s) | 1.32 | 5.49 | 1.70 |
| Max Chl Dpth (ft) | 2.98 | Hydr. Depth (ft) | 0.44 | 2.09 | 0.65 |
| Conv. Total (cfs) | 4458.0 | Conv. (cfs) | 1661.7 | 2514.5 | 281.8 |
| Length Wtd. (ft) | 642.31 | Wetted Per. (ft) | 261.58 | 20.47 | 23.29 |
| Min Ch El (ft) | 5374.00 | Shear (lb/sq ft) | 0.23 | 1.07 | 0.34 |
| Alpha | 3.19 | Stream Power (lb/ft s) | 0.30 | 5.88 | 0.58 |
| Frctn Loss (ft) | 0.18 | Cum Volume (acre-ft) | 9.24 | 0.74 | 9.72 |
| C & E Loss (ft) | 0.08 | Cum SA (acres) | 6.50 | 0.35 | 5.46 |

rning - The energy equation could not be balanced within the specified number of iterations. The
program used critical depth for the water surface and continued on with the calculations.
Warning - The conveyance ratio (upstream conveyance divided by downstream conveyance) is less

than 0.7 or greater than 1.4. This may indicate the need for additional cross sections.
Warning - The energy loss was greater than 1.0 ft (0.3 m). between the current and previous cross
section. This may indicate the need for additional cross sections.
arning - During the standard step iterations, when the assumed water surface was set equal to
critical depth, the calculated water surface came back below critical depth. This indicates
that there is not a valid subcritical answer. The program defaulted to critical depth.

CROSS SECTION RIVER: NE CANON DRAINAG
REACH: SUB-BASIN FROM N RS: 2

CROSS SECTION OUTPUT Profile #100 YR.

| | | | | | |
|---|---|---|---|---|---|
| W.S. Elev (ft) | 5369.20 | Element | Left OB | Channel | Right OB |
| Vel Head (ft) | 0.00 | Wt. n-Val. | 0.060 | 0.040 | 0.060 |
| E.G. Elev (ft) | 5369.21 | Reach Len. (ft) | 311.12 | 311.12 | 311.12 |
| Crit W.S. (ft) | | Flow Area (sq ft) | 194.97 | 59.10 | 2353.81 |
| E.G. Slope (ft/ft) | 0.000041 | Area (sq ft) | 194.97 | 59.10 | 2353.81 |
| Q Total (cfs) | 926.00 | Flow (cfs) | 29.19 | 29.32 | 867.49 |
| Top Width (ft) | 890.20 | Top Width (ft) | 212.71 | 18.00 | 659.49 |
| Vel Total (ft/s) | 0.36 | Avg. Vel. (ft/s) | 0.15 | 0.50 | 0.37 |
| Max Chl Dpth (ft) | 5.41 | Hydr. Depth (ft) | 0.92 | 3.28 | 3.57 |
| Conv. Total (cfs) | 144483.2 | Conv. (cfs) | 4554.9 | 4574.3 | 135354.0 |
| Length Wtd. (ft) | 311.12 | Wetted Per. (ft) | 212.79 | 19.65 | 665.25 |
| Min Ch El (ft) | 5364.56 | Shear (lb/sq ft) | 0.00 | 0.01 | 0.01 |
| Alpha | 1.08 | Stream Power (lb/ft s) | 0.00 | 0.00 | 0.00 |
| Frctn Loss (ft) | 0.01 | Cum Volume (acre-ft) | 12.85 | 0.55 | 11.16 |
| C & E Loss (ft) | 0.00 | Cum SA (acres) | 3.13 | 0.13 | 3.85 |

arning - The cross-section end points had to be extended vertically for the computed water surface.
Warning - The conveyance ratio (upstream conveyance divided by downstream conveyance) is less
than 0.7 or greater than 1.4. This may indicate the need for additional cross sections.

CROSS SECTION OUTPUT Profile #50 YR.

| | | | | | |
|---|---|---|---|---|---|
| W.S. Elev (ft) | 5368.61 | Element | Left OB | Channel | Right OB |
| Vel Head (ft) | 0.00 | Wt. n-Val. | 0.060 | 0.040 | 0.060 |
| E.G. Elev (ft) | 5368.61 | Reach Len. (ft) | 311.12 | 311.12 | 311.12 |
| Crit W.S. (ft) | | Flow Area (sq ft) | 82.24 | 48.32 | 1958.69 |
| E.G. Slope (ft/ft) | 0.000050 | Area (sq ft) | 82.24 | 48.32 | 1958.69 |
| Q Total (cfs) | 740.00 | Flow (cfs) | 9.09 | 23.21 | 707.71 |
| Top Width (ft) | 842.44 | Top Width (ft) | 164.95 | 18.00 | 659.49 |
| Vel Total (ft/s) | 0.35 | Avg. Vel. (ft/s) | 0.11 | 0.48 | 0.36 |
| Max Chl Dpth (ft) | 4.82 | Hydr. Depth (ft) | 0.50 | 2.68 | 2.97 |
| Conv. Total (cfs) | 104256.6 | Conv. (cfs) | 1280.3 | 3269.6 | 99706.7 |
| Length Wtd. (ft) | 311.12 | Wetted Per. (ft) | 165.02 | 19.65 | 664.65 |
| Min Ch El (ft) | 5364.56 | Shear (lb/sq ft) | 0.00 | 0.01 | 0.01 |
| Alpha | 1.05 | Stream Power (lb/ft s) | 0.00 | 0.00 | 0.00 |
| Frctn Loss (ft) | 0.01 | Cum Volume (acre-ft) | 11.02 | 0.48 | 8.86 |
| C & E Loss (ft) | 0.00 | Cum SA (acres) | 2.96 | 0.13 | 3.85 |

arning - The cross-section end points had to be extended vertically for the computed water surface.
arning - The conveyance ratio (upstream conveyance divided by downstream conveyance) is less
than 0.7 or greater than 1.4. This may indicate the need for additional cross sections.

ROSS SECTION OUTPUT Profile #10 YR.

| | | | | | |
|---|---|---|---|---|---|
| W.S. Elev (ft) | 5367.21 | Element | Left OB | Channel | Right OB |

| | | | | | | |
|---|---|---|---|---|---|---|
| Vel Head (ft) | 0.00 | Wt. n-Val. | | | 0.040 | 0.060 |
| E.G. Elev (ft) | 5367.21 | Reach Len. (ft) | 311.12 | 311.12 | 311.12 | |
| Crit W.S. (ft) | | Flow Area (sq ft) | | | 24.60 | 1096.11 |
| E.G. Slope (ft/ft) | 0.000087 | Area (sq ft) | | | 24.60 | 1096.11 |
| Q Total (cfs) | 408.00 | Flow (cfs) | | | 11.46 | 396.54 |
| Top Width (ft) | 576.08 | Top Width (ft) | | | 14.59 | 561.49 |
| Vel Total (ft/s) | 0.36 | Avg. Vel. (ft/s) | | | 0.47 | 0.36 |
| Max Chl Dpth (ft) | 3.42 | Hydr. Depth (ft) | | | 1.69 | 1.95 |
| Conv. Total (cfs) | 43630.2 | Conv. (cfs) | | | 1225.7 | 42404.5 |
| Length Wtd. (ft) | 311.12 | Wetted Per. (ft) | | | 15.84 | 565.19 |
| Min Ch El (ft) | 5364.56 | Shear (lb/sq ft) | | | 0.01 | 0.01 |
| Alpha | 1.01 | Stream Power (lb/ft s) | | | 0.00 | 0.00 |
| Frctn Loss (ft) | 0.01 | Cum Volume (acre-ft) | | 7.41 | 0.30 | 4.41 |
| C & E Loss (ft) | 0.00 | Cum SA (acres) | | 2.37 | 0.12 | 2.67 |

rning - Divided flow computed for this cross-section.
rning - The cross-section end points had to be extended vertically for the computed water surface.
Warning - The conveyance ratio (upstream conveyance divided by downstream conveyance) is less
than 0.7 or greater than 1.4. This may indicate the need for additional cross sections.

CROSS SECTION RIVER: NE CANON DRAINAG
REACH: SUB-BASIN FROM N RS: 1

CROSS SECTION OUTPUT Profile #100 YR.

| | | | | | |
|---|---|---|---|---|---|
| W.S. Elev (ft) | 5369.20 | Element | Left OB | Channel | Right OB |
| Vel Head (ft) | 0.00 | Wt. n-Val. | 0.060 | 0.040 | 0.060 |
| E.G. Elev (ft) | 5369.20 | Reach Len. (ft) | | | |
| Crit W.S. (ft) | 5364.11 | Flow Area (sq ft) | 3402.47 | 96.10 | 772.06 |
| E.G. Slope (ft/ft) | 0.000010 | Area (sq ft) | 3402.47 | 96.10 | 772.06 |
| Q Total (cfs) | 926.00 | Flow (cfs) | 800.53 | 33.08 | 92.39 |
| Top Width (ft) | 1100.06 | Top Width (ft) | 663.63 | 18.00 | 418.43 |
| Vel Total (ft/s) | 0.22 | Avg. Vel. (ft/s) | 0.24 | 0.34 | 0.12 |
| Max Chl Dpth (ft) | 6.70 | Hydr. Depth (ft) | 5.13 | 5.34 | 1.85 |
| Conv. Total (cfs) | 287925.3 | Conv. (cfs) | 248913.7 | 10285.4 | 28726.1 |
| Length Wtd. (ft) | | Wetted Per. (ft) | 670.16 | 19.65 | 419.26 |
| Min Ch El (ft) | 5362.50 | Shear (lb/sq ft) | 0.00 | 0.00 | 0.00 |
| Alpha | 1.14 | Stream Power (lb/ft s) | 0.00 | 0.00 | 0.00 |
| Frctn Loss (ft) | | Cum Volume (acre-ft) | | | |
| C & E Loss (ft) | | Cum SA (acres) | | | |

OSS SECTION OUTPUT Profile #50 YR.

| | | | | | |
|---|---|---|---|---|---|
| W.S. Elev (ft) | 5368.60 | Element | Left OB | Channel | Right OB |
| Vel Head (ft) | 0.00 | Wt. n-Val. | 0.060 | 0.040 | 0.060 |
| E.G. Elev (ft) | 5368.60 | Reach Len. (ft) | | | |
| Crit W.S. (ft) | 5363.95 | Flow Area (sq ft) | 3004.23 | 85.30 | 520.96 |
| E.G. Slope (ft/ft) | 0.000011 | Area (sq ft) | 3004.23 | 85.30 | 520.96 |
| Q Total (cfs) | 740.00 | Flow (cfs) | 663.44 | 27.64 | 48.93 |
| Top Width (ft) | 1100.06 | Top Width (ft) | 663.63 | 18.00 | 418.43 |
| Vel Total (ft/s) | 0.20 | Avg. Vel. (ft/s) | 0.22 | 0.32 | 0.09 |
| Max Chl Dpth (ft) | 6.10 | Hydr. Depth (ft) | 4.53 | 4.74 | 1.25 |
| Conv. Total (cfs) | 225755.9 | Conv. (cfs) | 202397.8 | 8431.8 | 14926.2 |
| Length Wtd. (ft) | | Wetted Per. (ft) | 669.56 | 19.65 | 418.66 |
| Min Ch El (ft) | 5362.50 | Shear (lb/sq ft) | 0.00 | 0.00 | 0.00 |
| Alpha | 1.15 | Stream Power (lb/ft s) | 0.00 | 0.00 | 0.00 |
| Frctn Loss (ft) | | Cum Volume (acre-ft) | | | |

| | | | | | | |
|---|---|---|---|---|---|---|
| C & E Loss (ft) | * | * Cum SA (acres) | * | * | * | * |

ROSS SECTION OUTPUT  Profile #10 YR.

| | | | | | |
|---|---|---|---|---|---|
| W.S. Elev (ft) | 5367.20 | Element | Left OB | Channel | Right OB |
| Vel Head (ft) | 0.00 | Wt. n-Val. | 0.060 | 0.040 | 0.060 |
| E.G. Elev (ft) | 5367.20 | Reach Len. (ft) | | | |
| Crit W.S. (ft) | 5363.75 | Flow Area (sq ft) | 2075.21 | 60.10 | 139.04 |
| E.G. Slope (ft/ft) | 0.000012 | Area (sq ft) | 2075.21 | 60.10 | 139.04 |
| Q Total (cfs) | 408.00 | Flow (cfs) | 381.68 | 16.41 | 9.90 |
| Top Width (ft) | 867.34 | Top Width (ft) | 663.63 | 18.00 | 185.71 |
| Vel Total (ft/s) | 0.18 | Avg. Vel. (ft/s) | 0.18 | 0.27 | 0.07 |
| Max Chl Dpth (ft) | 4.70 | Hydr. Depth (ft) | 3.13 | 3.34 | 0.75 |
| Conv. Total (cfs) | 116945.7 | Conv. (cfs) | 109402.6 | 4704.2 | 2838.9 |
| Length Wtd. (ft) | | Wetted Per. (ft) | 668.16 | 19.65 | 185.72 |
| Min Ch El (ft) | 5362.50 | Shear (lb/sq ft) | 0.00 | 0.00 | 0.00 |
| Alpha | 1.08 | Stream Power (lb/ft s) | 0.00 | 0.00 | 0.00 |
| Frctn Loss (ft) | | Cum Volume (acre-ft) | | | |
| C & E Loss (ft) | | Cum SA (acres) | | | |

SUMMARY OF REACH LENGTHS

iver: NE CANON DRAINAG

| Reach | River Sta. | Left | Channel | Right |
|---|---|---|---|---|
| SUB-BASIN FROM N* | 11 | 130.52 | 178.2 | 226.2 |
| SUB-BASIN FROM N* | 10 | 117.59 | 123.73 | 133.26 |
| SUB-BASIN FROM N* | 9.5 | Culvert | | |
| SUB-BASIN FROM N* | 9 | 921.6 | 738.87 | 563.85 |
| SUB-BASIN FROM N* | 8 | 621.48 | 659.67 | 748.44 |
| SUB-BASIN FROM N* | 7 | 1000 | 988.8 | 1029.2 |
| SUB-BASIN FROM N* | 6 | 225.86 | 492.6 | 258.94 |
| SUB-BASIN FROM N* | 5.8 | 83.16 | 83.32 | 83.48 |
| SUB-BASIN FROM N* | 5.5 | Culvert | | |
| SUB-BASIN FROM N* | 5 | 516.42 | 295.74 | 215.52 |
| SUB-BASIN FROM N* | 4 | 897.07 | 965.75 | 906.29 |
| SUB-BASIN FROM N* | 3 | 1376.63 | 575.56 | 416.06 |
| SUB-BASIN FROM N* | 2 | 311.12 | 311.12 | 311.12 |
| SUB-BASIN FROM N* | 1 | 0 | 0 | 0 |

Profile Output Table - Culvert Only

| Reach | River Sta | E.G. US. (ft) | W.S. US. (ft) | E.G. IC (ft) | E.G. OC (ft) | Min Top Rd (ft) | Culv Q (cfs) | Q Weir (cfs) | Delta WS (ft) | Culv Vel In (ft/s) |
|---|---|---|---|---|---|---|---|---|---|---|
| SUB-BASIN FROM N* | 9.5 | HIGH STREET | 5437.86 | 5437.85 | 5437.86 | 5437.54 | 5436.79 | 113.20 | 812.86 | 9.83 |
| SUB-BASIN FROM N* | 9.5 | HIGH STREET | 5437.78 | 5437.77 | 5437.78 | 5437.47 | 5436.79 | 112.53 | 627.47 | 10.06 |
| SUB-BASIN FROM N* | 9.5 | HIGH STREET | 5437.55 | 5437.54 | 5437.55 | 5437.27 | 5436.79 | 110.67 | 296.69 | 10.44 |
| SUB-BASIN FROM N* | 5.5 | SOUTH STREET | 5396.98 | 5396.97 | 5395.27 | 5396.98 | 5395.78 | 213.79 | 712.21 | 4.24 |
| SUB-BASIN FROM N* | 5.5 | SOUTH STREET | 5396.80 | 5396.78 | 5395.48 | 5396.80 | 5395.78 | 218.81 | 521.19 | 4.45 |
| SUB-BASIN FROM N* | 5.5 | SOUTH STREET | 5396.38 | 5396.38 | 5395.94 | 5396.38 | 5395.78 | 229.21 | 178.79 | 4.94 |

ofile Output Table - Standard Table 1

| Reach | River Sta | Q Total (cfs) | Min Ch El (ft) | W.S. Elev (ft) | Crit W.S. (ft) | E.G. Elev (ft) | E.G. Slope (ft/ft) | Vel Chnl (ft/s) | Flow Area (sq ft) | Top Width (ft) | F |
|---|---|---|---|---|---|---|---|---|---|---|---|
| SUB-BASIN FROM N* | 11 | 926.00 | 5435.97 | 5437.82 | | 5437.94 | 0.004687 | 3.25 | 447.08 | 563.4 | |
| SUB-BASIN FROM N* | 11 | 740.00 | 5435.97 | 5437.74 | | 5437.83 | 0.003944 | 2.87 | 401.94 | 555.9 | |
| SUB-BASIN FROM N* | 11 | 408.00 | 5435.97 | 5437.52 | | 5437.57 | 0.002612 | 2.07 | 289.20 | 476.4 | |
| SUB-BASIN FROM N* | 10 | 926.00 | 5429.00 | 5437.85 | 5432.42 | 5437.86 | 0.000076 | 0.67 | 1593.94 | 685.3 | |
| SUB-BASIN FROM N* | 10 | 740.00 | 5429.00 | 5437.77 | 5431.98 | 5437.78 | 0.000054 | 0.55 | 1538.19 | 682.0 | |
| SUB-BASIN FROM N* | 10 | 408.00 | 5429.00 | 5437.54 | 5431.05 | 5437.55 | 0.000022 | 0.33 | 1383.75 | 672.0 | |
| SUB-BASIN FROM N* | 9.5 | Culvert | | | | | | | | | |
| SUB-BASIN FROM N* | 9 | 926.00 | 5424.60 | 5428.02 | 5428.02 | 5429.02 | 0.019118 | 8.00 | 115.75 | 58.6 | |
| SUB-BASIN FROM N* | 9 | 740.00 | 5424.60 | 5427.71 | 5427.71 | 5428.60 | 0.020194 | 7.58 | 97.60 | 55.9 | |
| SUB-BASIN FROM N* | 9 | 408.00 | 5424.60 | 5427.11 | 5427.11 | 5427.71 | 0.021432 | 6.26 | 65.17 | 52.1 | |
| SUB-BASIN FROM N* | 8 | 926.00 | 5410.44 | 5414.57 | 5414.19 | 5415.07 | 0.010022 | 5.68 | 162.95 | 84.7 | |
| SUB-BASIN FROM N* | 8 | 740.00 | 5410.44 | 5414.27 | | 5414.72 | 0.010951 | 5.38 | 137.55 | 83.0 | |
| SUB-BASIN FROM N* | 8 | 408.00 | 5410.44 | 5413.64 | 5413.47 | 5413.98 | 0.013886 | 4.69 | 86.95 | 77.1 | |
| SUB-BASIN FROM N* | 7 | 926.00 | 5403.35 | 5409.34 | 5408.63 | 5409.80 | 0.006272 | 5.98 | 198.03 | 90.4 | |
| SUB-BASIN FROM N* | 7 | 740.00 | 5403.35 | 5408.96 | 5408.31 | 5409.39 | 0.006134 | 5.65 | 165.64 | 83.7 | |
| SUB-BASIN FROM N* | 7 | 408.00 | 5403.35 | 5408.13 | 5407.31 | 5408.46 | 0.005557 | 4.77 | 102.15 | 68.2 | |
| SUB-BASIN FROM N* | 6 | 926.00 | 5394.67 | 5398.52 | 5398.52 | 5399.19 | 0.022028 | 6.54 | 141.55 | 108.7 | |
| SUB-BASIN FROM N* | 6 | 740.00 | 5394.67 | 5398.28 | 5398.28 | 5398.90 | 0.022332 | 6.32 | 117.17 | 95.8 | |
| SUB-BASIN FROM N* | 6 | 408.00 | 5394.67 | 5397.80 | 5397.80 | 5398.27 | 0.024982 | 5.50 | 74.12 | 80.9 | |
| SUB-BASIN FROM N* | 5.8 | 926.00 | 5387.35 | 5396.97 | 5391.63 | 5396.98 | 0.000097 | 1.19 | 1451.67 | 607.5 | |
| SUB-BASIN FROM N* | 5.8 | 740.00 | 5387.35 | 5396.78 | 5391.24 | 5396.80 | 0.000075 | 1.03 | 1339.67 | 606.1 | |
| SUB-BASIN FROM N* | 5.8 | 408.00 | 5387.35 | 5396.38 | 5390.24 | 5396.38 | 0.000036 | 0.68 | 1095.27 | 596.3 | |
| SUB-BASIN FROM N* | 5.5 | Culvert | | | | | | | | | |
| SUB-BASIN FROM N* | 5 | 926.00 | 5386.20 | 5392.73 | | 5393.14 | 0.004176 | 5.13 | 180.37 | 53.4 | |
| SUB-BASIN FROM N* | 5 | 740.00 | 5386.20 | 5392.34 | | 5392.67 | 0.003693 | 4.62 | 160.16 | 50.5 | |
| SUB-BASIN FROM N* | 5 | 408.00 | 5386.20 | 5391.44 | | 5391.62 | 0.002643 | 3.48 | 117.39 | 43.9 | |
| SUB-BASIN FROM N* | 4 | 926.00 | 5386.00 | 5390.20 | 5390.14 | 5390.89 | 0.017363 | 6.66 | 140.61 | 108.3 | |
| SUB-BASIN FROM N* | 4 | 740.00 | 5386.00 | 5389.98 | 5389.90 | 5390.57 | 0.018095 | 6.19 | 119.51 | 85.2 | |
| SUB-BASIN FROM N* | 4 | 408.00 | 5386.00 | 5389.28 | 5389.27 | 5389.83 | 0.023546 | 5.94 | 68.69 | 63.2 | |
| SUB-BASIN FROM N* | 3 | 926.00 | 5374.00 | 5377.40 | 5377.40 | 5377.76 | 0.011274 | 7.18 | 313.22 | 377.9 | |
| SUB-BASIN FROM N* | 3 | 740.00 | 5374.00 | 5377.26 | 5377.26 | 5377.60 | 0.010637 | 6.72 | 263.34 | 344.5 | |
| SUB-BASIN FROM N* | 3 | 408.00 | 5374.00 | 5376.98 | 5376.98 | 5377.26 | 0.008376 | 5.49 | 172.73 | 304.8 | |
| SUB-BASIN FROM N* | 2 | 926.00 | 5364.56 | 5369.20 | | 5369.21 | 0.000041 | 0.50 | 2607.88 | 890.2 | |
| SUB-BASIN FROM N* | 2 | 740.00 | 5364.56 | 5368.61 | | 5368.61 | 0.000050 | 0.48 | 2089.25 | 842.4 | |
| SUB-BASIN FROM N* | 2 | 408.00 | 5364.56 | 5367.21 | | 5367.21 | 0.000087 | 0.47 | 1120.71 | 576.0 | |
| SUB-BASIN FROM N* | 1 | 926.00 | 5362.50 | 5369.20 | 5364.11 | 5369.20 | 0.000010 | 0.34 | 4270.64 | 1100.0 | |
| SUB-BASIN FROM N* | 1 | 740.00 | 5362.50 | 5368.60 | 5363.95 | 5368.60 | 0.000011 | 0.32 | 3610.50 | 1100.0 | |
| SUB-BASIN FROM N* | 1 | 408.00 | 5362.50 | 5367.20 | 5363.75 | 5367.20 | 0.000012 | 0.27 | 2274.35 | 867.3 | |

RORS WARNINGS AND NOTES
Errors Warnings and Notes for Plan : PRE DET.

ver: NE CANON DRAINAG Reach: SUB-BASIN FROM N RS: 11 Profile: 1
Warning - The cross-section end points had to be extended vertically for the computed water surface.
Warning - The conveyance ratio (upstream conveyance divided by downstream conveyance) is less than 0.7 or greater than 1.4. This may indicate the need for additional cross sections.
ver: NE CANON DRAINAG Reach: SUB-BASIN FROM N RS: 11 Profile: 2
Warning - The conveyance ratio (upstream conveyance divided by downstream conveyance) is less than 0.7 or greater than 1.4. This may indicate the need for additional cross sections.
ver: NE CANON DRAINAG Reach: SUB-BASIN FROM N RS: 11 Profile: 3
Warning - The conveyance ratio (upstream conveyance divided by downstream conveyance) is less than 0.7 or greater than 1.4. This may indicate the need for additional cross sections.
ver: NE CANON DRAINAG Reach: SUB-BASIN FROM N RS: 9.5 Profile: 1
Warning - During subcritical analysis, while trying to calculate culvert and weir flow, the program could not get a balance of energy within the specified tolerance and number of trials. The program used the solution with the minimum error.
ver: NE CANON DRAINAG Reach: SUB-BASIN FROM N RS: 9.5 Profile: 1 Culv: HIGH STREET
Warning - Since the culvert has supercritical flow, the program should be run in mixed flow in order to check if the cross section downstream of the culvert has supercritical flow.
Note - The normal depth exceeds the height of the culvert. The program assumes that the normal depth is equal to the height of the culvert.
Note - Culvert critical depth exceeds the height of the culvert.
Note - The flow in the culvert is entirely supercritical.
ver: NE CANON DRAINAG Reach: SUB-BASIN FROM N RS: 9.5 Profile: 2
Warning - During subcritical analysis, while trying to calculate culvert and weir flow, the program could not get a balance of energy within the specified tolerance and number of trials. The program used the solution with the minimum error.
River: NE CANON DRAINAG Reach: SUB-BASIN FROM N RS: 9.5 Profile: 2 Culv: HIGH STREET
Warning - Since the culvert has supercritical flow, the program should be run in mixed flow in order to check if the cross section downstream of the culvert has supercritical flow.
Note - The normal depth exceeds the height of the culvert. The program assumes that the normal depth is equal to the height of the culvert.
Note - Culvert critical depth exceeds the height of the culvert.
Note - The flow in the culvert is entirely supercritical.
River: NE CANON DRAINAG Reach: SUB-BASIN FROM N RS: 9.5 Profile: 3
Warning - During subcritical analysis, while trying to calculate culvert and weir flow, the program could not get a balance of energy within the specified tolerance and number of trials. The program used the solution with the minimum error.
River: NE CANON DRAINAG Reach: SUB-BASIN FROM N RS: 9.5 Profile: 3 Culv: HIGH STREET
Warning - Since the culvert has supercritical flow, the program should be run in mixed flow in order to check if the cross section downstream of the culvert has supercritical flow.
Note - The normal depth exceeds the height of the culvert. The program assumes that the normal depth is equal to the height of the culvert.
Note - Culvert critical depth exceeds the height of the culvert.
Note - The flow in the culvert is entirely supercritical.
River: NE CANON DRAINAG Reach: SUB-BASIN FROM N RS: 9 Profile: 1
Warning - The energy equation could not be balanced within the specified number of iterations. The program used critical depth for the water surface and continued on with the calculations.
Warning - The energy loss was greater than 1.0 ft (0.3 m). between the current and previous cross section. This may indicate the need for additional cross sections.
Warning - During the standard step iterations, when the assumed water surface was set equal to critical depth, the calculated water surface came back below critical depth. This indicates that there is not a valid subcritical answer. The program defaulted to critical depth.
Warning - The parabolic search method failed to converge on critical depth. The program will try the cross section slice/secant method to find critical depth.
River: NE CANON DRAINAG Reach: SUB-BASIN FROM N RS: 9 Profile: 2
Warning - The energy equation could not be balanced within the specified number of iterations. The program used critical depth for the water surface and continued on with the calculations.
Warning - The energy loss was greater than 1.0 ft (0.3 m). between the current and previous cross section. This may indicate

the need for additional cross sections.

Warning - During the standard step iterations, when the assumed water surface was set equal to critical depth, the calculated water surface came back below critical depth. This indicates that there is not a valid subcritical answer. The program defaulted to critical depth.

River: NE CANON DRAINAG Reach: SUB-BASIN FROM N RS: 9 Profile: 3

Warning - The energy equation could not be balanced within the specified number of iterations. The program used critical depth for the water surface and continued on with the calculations.

Warning - The energy loss was greater than 1.0 ft (0.3 m). between the current and previous cross section. This may indicate the need for additional cross sections.

Warning - During the standard step iterations, when the assumed water surface was set equal to critical depth, the calculated water surface came back below critical depth. This indicates that there is not a valid subcritical answer. The program defaulted to critical depth.

Warning - The parabolic search method failed to converge on critical depth. The program will try the cross section slice/secant method to find critical depth.

River: NE CANON DRAINAG Reach: SUB-BASIN FROM N RS: 8 Profile: 1

Warning - The energy loss was greater than 1.0 ft (0.3 m). between the current and previous cross section. This may indicate the need for additional cross sections.

Warning - The parabolic search method failed to converge on critical depth. The program will try the cross section slice/secant method to find critical depth.

River: NE CANON DRAINAG Reach: SUB-BASIN FROM N RS: 8 Profile: 2

Warning - The energy loss was greater than 1.0 ft (0.3 m). between the current and previous cross section. This may indicate the need for additional cross sections.

River: NE CANON DRAINAG Reach: SUB-BASIN FROM N RS: 8 Profile: 3

Warning - The conveyance ratio (upstream conveyance divided by downstream conveyance) is less than 0.7 or greater than 1.4. This may indicate the need for additional cross sections.

Warning - The energy loss was greater than 1.0 ft (0.3 m). between the current and previous cross section. This may indicate the need for additional cross sections.

Warning - The parabolic search method failed to converge on critical depth. The program will try the cross section slice/secant method to find critical depth.

River: NE CANON DRAINAG Reach: SUB-BASIN FROM N RS: 7 Profile: 1

Warning - Divided flow computed for this cross-section.

Warning - The conveyance ratio (upstream conveyance divided by downstream conveyance) is less than 0.7 or greater than 1.4. This may indicate the need for additional cross sections.

Warning - The energy loss was greater than 1.0 ft (0.3 m). between the current and previous cross section. This may indicate the need for additional cross sections.

River: NE CANON DRAINAG Reach: SUB-BASIN FROM N RS: 7 Profile: 2

Warning - Divided flow computed for this cross-section.

Warning - The conveyance ratio (upstream conveyance divided by downstream conveyance) is less than 0.7 or greater than 1.4. This may indicate the need for additional cross sections.

Warning - The energy loss was greater than 1.0 ft (0.3 m). between the current and previous cross section. This may indicate the need for additional cross sections.

River: NE CANON DRAINAG Reach: SUB-BASIN FROM N RS: 7 Profile: 3

Warning - Divided flow computed for this cross-section.

Warning - The conveyance ratio (upstream conveyance divided by downstream conveyance) is less than 0.7 or greater than 1.4. This may indicate the need for additional cross sections.

Warning - The energy loss was greater than 1.0 ft (0.3 m). between the current and previous cross section. This may indicate the need for additional cross sections.

River: NE CANON DRAINAG Reach: SUB-BASIN FROM N RS: 6 Profile: 1

Warning - The energy equation could not be balanced within the specified number of iterations. The program used critical depth for the water surface and continued on with the calculations.

Warning - The velocity head has changed by more than 0.5 ft (0.15 m). This may indicate the need for additional cross sections.

Warning - The conveyance ratio (upstream conveyance divided by downstream conveyance) is less than 0.7 or greater than 1.4. This may indicate the need for additional cross sections.

Warning - The energy loss was greater than 1.0 ft (0.3 m). between the current and previous cross section. This may indicate the need for additional cross sections.

Warning - During the standard step iterations, when the assumed water surface was set equal to critical depth, the calculated water surface came back below critical depth. This indicates that there is not a valid subcritical answer. The program defaulted to critical depth.

River: NE CANON DRAINAG Reach: SUB-BASIN FROM N RS: 6 Profile: 2

Warning - The energy equation could not be balanced within the specified number of iterations. The program used critical depth for the water surface and continued on with the calculations.

Warning - The velocity head has changed by more than 0.5 ft (0.15 m). This may indicate the need for additional cross sections.

Warning - The conveyance ratio (upstream conveyance divided by downstream conveyance) is less than 0.7 or greater than 1.4. This may indicate the need for additional cross sections.

Warning - The energy loss was greater than 1.0 ft (0.3 m). between the current and previous cross section. This may indicate the need for additional cross sections.

Warning - During the standard step iterations, when the assumed water surface was set equal to critical depth, the calculated water surface came back below critical depth. This indicates that there is not a valid subcritical answer. The program defaulted to critical depth.

River: NE CANON DRAINAG Reach: SUB-BASIN FROM N RS: 6 Profile: 3

Warning - The energy equation could not be balanced within the specified number of iterations. The program used critical depth for the water surface and continued on with the calculations.

Warning - The conveyance ratio (upstream conveyance divided by downstream conveyance) is less than 0.7 or greater than 1.4. This may indicate the need for additional cross sections.

Warning - The energy loss was greater than 1.0 ft (0.3 m). between the current and previous cross section. This may indicate the need for additional cross sections.

Warning - During the standard step iterations, when the assumed water surface was set equal to critical depth, the calculated water surface came back below critical depth. This indicates that there is not a valid subcritical answer. The program defaulted to critical depth.

River: NE CANON DRAINAG Reach: SUB-BASIN FROM N RS: 5.5 Profile: 3 Culv: SOUTH STREET

Note - The normal depth exceeds the height of the culvert. The program assumes that the normal depth is equal to the height of the culvert.

River: NE CANON DRAINAG Reach: SUB-BASIN FROM N RS: 5 Profile: 1

Warning - The conveyance ratio (upstream conveyance divided by downstream conveyance) is less than 0.7 or greater than 1.4. This may indicate the need for additional cross sections.

Warning - The energy loss was greater than 1.0 ft (0.3 m). between the current and previous cross section. This may indicate the need for additional cross sections.

River: NE CANON DRAINAG Reach: SUB-BASIN FROM N RS: 5 Profile: 2

Warning - The conveyance ratio (upstream conveyance divided by downstream conveyance) is less than 0.7 or greater than 1.4. This may indicate the need for additional cross sections.

Warning - The energy loss was greater than 1.0 ft (0.3 m). between the current and previous cross section. This may indicate the need for additional cross sections.

River: NE CANON DRAINAG Reach: SUB-BASIN FROM N RS: 5 Profile: 3

Warning - The conveyance ratio (upstream conveyance divided by downstream conveyance) is less than 0.7 or greater than 1.4. This may indicate the need for additional cross sections.

Warning - The energy loss was greater than 1.0 ft (0.3 m). between the current and previous cross section. This may indicate the need for additional cross sections.

River: NE CANON DRAINAG Reach: SUB-BASIN FROM N RS: 4 Profile: 1

Warning - Divided flow computed for this cross-section.

Warning - The energy loss was greater than 1.0 ft (0.3 m). between the current and previous cross section. This may indicate the need for additional cross sections.

Warning - The parabolic search method failed to converge on critical depth. The program will try the cross section slice/secant method to find critical depth.

River: NE CANON DRAINAG Reach: SUB-BASIN FROM N RS: 4 Profile: 2

Warning - The energy loss was greater than 1.0 ft (0.3 m). between the current and previous cross section. This may indicate the need for additional cross sections.

Warning - The parabolic search method failed to converge on critical depth. The program will try the cross section slice/secant method to find critical depth.

River: NE CANON DRAINAG Reach: SUB-BASIN FROM N RS: 4 Profile: 3

Warning - The conveyance ratio (upstream conveyance divided by downstream conveyance) is less than 0.7 or greater than 1.4. This may indicate the need for additional cross sections.

Warning - The energy loss was greater than 1.0 ft (0.3 m). between the current and previous cross section. This may indicate the need for additional cross sections.

River: NE CANON DRAINAG Reach: SUB-BASIN FROM N RS: 3 Profile: 1

Warning - The energy equation could not be balanced within the specified number of iterations. The program used critical depth for the water surface and continued on with the calculations.

Warning - The conveyance ratio (upstream conveyance divided by downstream conveyance) is less than 0.7 or greater than 1.4. This may indicate the need for additional cross sections.

Warning - The energy loss was greater than 1.0 ft (0.3 m). between the current and previous cross section. This may indicate the need for additional cross sections.

Warning - During the standard step iterations, when the assumed water surface was set equal to critical depth, the calculated water surface came back below critical depth. This indicates that there is not a valid subcritical answer. The program defaulted to critical depth.

River: NE CANON DRAINAG Reach: SUB-BASIN FROM N RS: 3 Profile: 2

Warning - The energy equation could not be balanced within the specified number of iterations. The program used critical depth for the water surface and continued on with the calculations.

Warning - The conveyance ratio (upstream conveyance divided by downstream conveyance) is less than 0.7 or greater than 1.4. This may indicate the need for additional cross sections.

Warning - The energy loss was greater than 1.0 ft (0.3 m). between the current and previous cross section. This may indicate the need for additional cross sections.

Warning - During the standard step iterations, when the assumed water surface was set equal to critical depth, the calculated water surface came back below critical depth. This indicates that there is not a valid subcritical answer. The program defaulted to critical depth.

Warning - The parabolic search method failed to converge on critical depth. The program will try the cross section slice/secant method to find critical depth.

ver: NE CANON DRAINAG Reach: SUB-BASIN FROM N RS: 3 Profile: 3

Warning - The energy equation could not be balanced within the specified number of iterations. The program used critical depth for the water surface and continued on with the calculations.

Warning - The conveyance ratio (upstream conveyance divided by downstream conveyance) is less than 0.7 or greater than 1.4. This may indicate the need for additional cross sections.

Warning - The energy loss was greater than 1.0 ft (0.3 m). between the current and previous cross section. This may indicate the need for additional cross sections.

Warning - During the standard step iterations, when the assumed water surface was set equal to critical depth, the calculated water surface came back below critical depth. This indicates that there is not a valid subcritical answer. The program defaulted to critical depth.

ver: NE CANON DRAINAG Reach: SUB-BASIN FROM N RS: 2 Profile: 1

Warning - The cross-section end points had to be extended vertically for the computed water surface.

Warning - The conveyance ratio (upstream conveyance divided by downstream conveyance) is less than 0.7 or greater than 1.4. This may indicate the need for additional cross sections.

iver: NE CANON DRAINAG Reach: SUB-BASIN FROM N RS: 2 Profile: 2

Warning - The cross-section end points had to be extended vertically for the computed water surface.

Warning - The conveyance ratio (upstream conveyance divided by downstream conveyance) is less than 0.7 or greater than 1.4. This may indicate the need for additional cross sections.

River: NE CANON DRAINAG Reach: SUB-BASIN FROM N RS: 2 Profile: 3

Warning - Divided flow computed for this cross-section.

Warning - The cross-section end points had to be extended vertically for the computed water surface.

Warning - The conveyance ratio (upstream conveyance divided by downstream conveyance) is less than 0.7 or greater than 1.4. This may indicate the need for additional cross sections.

# SECTION 4

## HEC-RAS Run – As Built Conditions

HEC-RAS Version 2.0 April 1997
U.S. Army Corp of Engineers
Hydrologic Engineering Center
609 Second Street, Suite D
Davis, California 95616-4687
(916) 756-1104

```
X     X  XXXXXX    XXXX        XXXX       XX      XXXX
X     X  X        X    X      X   X     X  X    X
X     X  X        X           X   X    X    X   X
XXXXXXX  XXXX     X       XXX  XXXX     XXXXXX    XXXX
X     X  X        X           X  X     X    X        X
X     X  X        X    X      X   X    X    X        X
X     X  XXXXXX    XXXX       X    X   X    X   XXXXX
```

**********

..OJECT DATA
Project Title: CANON CITY LOMR - AS BUILT
roject File : safety.prj
n Date and Time: 3/30/98 8:33:00 AM

Project in English units

roject Description:
AS BUILT CONDITIONS
TTER OF MAP REVISION
TY OF CANON CITY,COLORADO
3/26/98
W

CROSS SECTION RIVER: RED CANON DRAW
ACH: MAIN STEM RS: 11

OSS SECTION OUTPUT Profile #100 YR.

| | | | | | |
|---|---|---|---|---|---|
| W.S. Elev (ft) | 5437.47 | Element | Left OB | Channel | Right OB |
| Vel Head (ft) | 0.01 | Wt. n-Val. | 0.060 | 0.040 | 0.060 |
| E.G. Elev (ft) | 5437.48 | Reach Len. (ft) | 133.26 | 123.73 | 117.59 |
| Crit W.S. (ft) | 5432.30 | Flow Area (sq ft) | 86.71 | 1155.66 | 79.38 |
| E.G. Slope (ft/ft) | 0.000130 | Area (sq ft) | 86.71 | 1155.66 | 79.38 |
| Q Total (cfs) | 926.00 | Flow (cfs) | 22.51 | 880.99 | 22.51 |
| Top Width (ft) | 668.67 | Top Width (ft) | 121.42 | 469.42 | 77.83 |
| Vel Total (ft/s) | 0.70 | Avg. Vel. (ft/s) | 0.26 | 0.76 | 0.28 |
| Max Chl Dpth (ft) | 8.47 | Hydr. Depth (ft) | 0.71 | 2.46 | 1.02 |
| Conv. Total (cfs) | 81285.4 | Conv. (cfs) | 1975.5 | 77334.0 | 1975.9 |
| Length Wtd. (ft) | 123.73 | Wetted Per. (ft) | 121.67 | 477.99 | 78.77 |
| Min Ch El (ft) | 5429.00 | Shear (lb/sq ft) | 0.01 | 0.02 | 0.01 |
| Alpha | 1.13 | Stream Power (lb/ft s) | 0.00 | 0.01 | 0.00 |
| Frctn Loss (ft) | | Cum Volume (acre-ft) | 1.19 | 81.79 | 1.23 |
| C & E Loss (ft) | | Cum SA (acres) | 0.48 | 16.62 | 0.40 |

CROSS SECTION OUTPUT Profile #50 YR.

| | | | | | |
|---|---|---|---|---|---|
| W.S. Elev (ft) | 5437.31 | Element | Left OB | Channel | Right OB |
| Vel Head (ft) | 0.01 | Wt. n-Val. | 0.060 | 0.040 | 0.060 |
| E.G. Elev (ft) | 5437.32 | Reach Len. (ft) | 133.26 | 123.73 | 117.59 |
| Crit W.S. (ft) | 5431.85 | Flow Area (sq ft) | 68.79 | 1080.02 | 66.83 |
| E.G. Slope (ft/ft) | 0.000105 | Area (sq ft) | 68.79 | 1080.02 | 66.83 |
| Q Total (cfs) | 740.00 | Flow (cfs) | 15.83 | 708.92 | 15.24 |
| Top Width (ft) | 642.25 | Top Width (ft) | 95.00 | 469.42 | 77.83 |
| Vel Total (ft/s) | 0.61 | Avg. Vel. (ft/s) | 0.23 | 0.66 | 0.23 |
| Max Chl Dpth (ft) | 8.31 | Hydr. Depth (ft) | 0.72 | 2.30 | 0.86 |
| Conv. Total (cfs) | 72111.8 | Conv. (cfs) | 1542.8 | 69083.5 | 1485.5 |
| Length Wtd. (ft) | 123.73 | Wetted Per. (ft) | 95.08 | 477.99 | 78.61 |
| Min Ch El (ft) | 5429.00 | Shear (lb/sq ft) | 0.00 | 0.01 | 0.01 |
| Alpha | 1.12 | Stream Power (lb/ft s) | 0.00 | 0.01 | 0.00 |
| Frctn Loss (ft) | | Cum Volume (acre-ft) | 0.84 | 74.32 | 0.88 |
| C & E Loss (ft) | | Cum SA (acres) | 0.39 | 16.44 | 0.37 |

CROSS SECTION OUTPUT Profile #10 YR.

| | | | | | |
|---|---|---|---|---|---|
| W.S. Elev (ft) | 5435.97 | Element | Left OB | Channel | Right OB |
| Vel Head (ft) | 0.01 | Wt. n-Val. | | 0.040 | |
| E.G. Elev (ft) | 5435.99 | Reach Len. (ft) | 133.26 | 123.73 | 117.59 |
| Crit W.S. (ft) | 5430.93 | Flow Area (sq ft) | | 451.35 | |
| E.G. Slope (ft/ft) | 0.000633 | Area (sq ft) | | 451.35 | |
| Q Total (cfs) | 408.00 | Flow (cfs) | | 408.00 | |
| Top Width (ft) | 465.81 | Top Width (ft) | | 465.81 | |
| Vel Total (ft/s) | 0.90 | Avg. Vel. (ft/s) | | 0.90 | |
| Max Chl Dpth (ft) | 6.97 | Hydr. Depth (ft) | | 0.97 | |
| Conv. Total (cfs) | 16219.5 | Conv. (cfs) | | 16219.5 | |
| Length Wtd. (ft) | 123.73 | Wetted Per. (ft) | | 474.39 | |
| Min Ch El (ft) | 5429.00 | Shear (lb/sq ft) | | 0.04 | |
| Alpha | 1.00 | Stream Power (lb/ft s) | | 0.03 | |
| Frctn Loss (ft) | | Cum Volume (acre-ft) | 0.25 | 27.06 | 0.26 |
| C & E Loss (ft) | | Cum SA (acres) | 0.14 | 9.42 | 0.15 |

ULVERT RIVER: RED CANON DRAW
EACH: MAIN STEM RS: 10.5

ULVERT OUTPUT Profile #100 YR.
Culvert ID : HIGH ST - 6'

| | | | |
|---|---|---|---|
| Culv Q (cfs) | 292.92 | Culv Vel In (ft/s) | 10.37 |
| # Barrels | 1 | Culv Vel Out (ft/s) | 12.38 |
| Q Barrel (cfs) | 292.92 | Culv Inv El Up (ft) | 5429.00 |
| W.S. US. (ft) | 5437.47 | Culv Inv El Dn (ft) | 5428.85 |
| E.G. US. (ft) | 5437.48 | Culv Frctn Ls (ft) | 0.73 |
| Delta WS (ft) | 9.43 | Culv Ext Lss (ft) | 6.86 |
| Delta EG (ft) | 8.44 | Culv Ent Lss (ft) | 0.83 |
| E.G. IC (ft) | 5437.20 | Q Weir (cfs) | 416.51 |
| E.G. OC (ft) | 5437.48 | Weir Sta Lft (ft) | 84.72 |
| Culv WS In (ft) | 5434.97 | Weir Sta Rgt (ft) | 708.26 |
| Culv WS Out (ft) | 5433.53 | Weir Submerg | 0.00 |
| Culv Nml Depth (ft) | 6.00 | Weir Max Depth (ft) | 0.93 |
| Culv Crt Depth (ft) | 4.68 | Weir Avg Depth (ft) | 0.35 |
| Culv Ful Lngh (ft) | | Min Top Rd (ft) | 5436.55 |

Note - The normal depth exceeds the height of the culvert. The program assumes that the normal

depth is equal to the height of the culvert.

LVERT OUTPUT  Profile #50 YR.
lvert ID : HIGH ST - 6'

| | | | | | |
|---|---|---|---|---|---|
| Culv Q (cfs) | 286.87 | Culv Vel In (ft/s) | 10.18 |
| # Barrels | 1 | Culv Vel Out (ft/s) | 12.24 |
| Q Barrel (cfs) | 286.87 | Culv Inv El Up (ft) | 5429.00 |
| W.S. US. (ft) | 5437.31 | Culv Inv El Dn (ft) | 5428.85 |
| E.G. US. (ft) | 5437.32 | Culv Frctn Ls (ft) | 0.70 |
| Delta WS (ft) | 9.55 | Culv Ext Lss (ft) | 7.18 |
| Delta EG (ft) | 8.69 | Culv Ent Lss (ft) | 0.80 |
| E.G. IC (ft) | 5437.03 | Q Weir (cfs) | 240.48 |
| E.G. OC (ft) | 5437.32 | Weir Sta Lft (ft) | 140.07 |
| Culv WS In (ft) | 5434.90 | Weir Sta Rgt (ft) | 708.26 |
| Culv WS Out (ft) | 5433.48 | Weir Submerg | 0.00 |
| Culv Nml Depth (ft) | 6.00 | Weir Max Depth (ft) | 0.78 |
| Culv Crt Depth (ft) | 4.63 | Weir Avg Depth (ft) | 0.29 |
| Culv Ful Lngh (ft) | | Min Top Rd (ft) | 5436.55 |

Note - The normal depth exceeds the height of the culvert. The program assumes that the normal
depth is equal to the height of the culvert.

CULVERT OUTPUT  Profile #10 YR.
lvert ID : HIGH ST - 6'

| | | | | | |
|---|---|---|---|---|---|
| Culv Q (cfs) | 228.76 | Culv Vel In (ft/s) | 8.81 |
| # Barrels | 1 | Culv Vel Out (ft/s) | 10.99 |
| Q Barrel (cfs) | 228.76 | Culv Inv El Up (ft) | 5429.00 |
| W.S. US. (ft) | 5435.97 | Culv Inv El Dn (ft) | 5428.85 |
| E.G. US. (ft) | 5435.99 | Culv Frctn Ls (ft) | 0.52 |
| Delta WS (ft) | 8.71 | Culv Ext Lss (ft) | 7.11 |
| Delta EG (ft) | 8.23 | Culv Ent Lss (ft) | 0.60 |
| E.G. IC (ft) | 5435.52 | Q Weir (cfs) | |
| E.G. OC (ft) | 5435.99 | Weir Sta Lft (ft) | |
| Culv WS In (ft) | 5434.18 | Weir Sta Rgt (ft) | |
| Culv WS Out (ft) | 5432.99 | Weir Submerg | |
| Culv Nml Depth (ft) | 6.00 | Weir Max Depth (ft) | |
| Culv Crt Depth (ft) | 4.14 | Weir Avg Depth (ft) | |
| Culv Ful Lngh (ft) | | Min Top Rd (ft) | 5436.55 |

te - The normal depth exceeds the height of the culvert. The program assumes that the normal
depth is equal to the height of the culvert.

LVERT OUTPUT  Profile #100 YR.
lvert ID : HIGH ST - 5'

| | | | | | |
|---|---|---|---|---|---|
| Culv Q (cfs) | 216.56 | Culv Vel In (ft/s) | 11.03 |
| # Barrels | 1 | Culv Vel Out (ft/s) | 12.35 |
| Q Barrel (cfs) | 216.56 | Culv Inv El Up (ft) | 5429.00 |
| W.S. US. (ft) | 5437.47 | Culv Inv El Dn (ft) | 5428.85 |
| E.G. US. (ft) | 5437.48 | Culv Frctn Ls (ft) | 1.14 |
| Delta WS (ft) | 9.43 | Culv Ext Lss (ft) | 6.35 |
| Delta EG (ft) | 8.44 | Culv Ent Lss (ft) | 0.94 |
| E.G. IC (ft) | 5437.05 | Q Weir (cfs) | 416.51 |
| E.G. OC (ft) | 5437.49 | Weir Sta Lft (ft) | 84.72 |
| Culv WS In (ft) | 5434.00 | Weir Sta Rgt (ft) | 708.26 |
| Culv WS Out (ft) | 5433.03 | Weir Submerg | 0.00 |

| | | | | | | | |
|---|---|---|---|---|---|---|---|
| * Culv Nml Depth (ft) | * | 5.00 | * Weir Max Depth (ft) | * | 0.93 | * |
| * Culv Crt Depth (ft) | * | 4.18 | * Weir Avg Depth (ft) | * | 0.35 | * |
| Culv Ful Lngh (ft) | * | 31.99 | * Min Top Rd (ft) | * | 5436.55 | * |

ote - The normal depth exceeds the height of the culvert. The program assumes that the normal depth is equal to the height of the culvert.

CULVERT OUTPUT Profile #50 YR.
ulvert ID : HIGH ST - 5'

| | | | | | | | |
|---|---|---|---|---|---|---|---|
| * Culv Q (cfs) | * | 212.65 | * Culv Vel In (ft/s) | * | 10.83 | * |
| # Barrels | * | 1 | * Culv Vel Out (ft/s) | * | 12.21 | * |
| Q Barrel (cfs) | * | 212.65 | * Culv Inv El Up (ft) | * | 5429.00 | * |
| * W.S. US. (ft) | * | 5437.31 | * Culv Inv El Dn (ft) | * | 5428.85 | * |
| E.G. US. (ft) | * | 5437.32 | * Culv Frctn Ls (ft) | * | 1.10 | * |
| Delta WS (ft) | * | 9.55 | * Culv Ext Lss (ft) | * | 6.69 | * |
| * Delta EG (ft) | * | 8.69 | * Culv Ent Lss (ft) | * | 0.91 | * |
| * E.G. IC (ft) | * | 5436.89 | * Q Weir (cfs) | * | 240.48 | * |
| E.G. OC (ft) | * | 5437.32 | * Weir Sta Lft (ft) | * | 140.07 | * |
| Culv WS In (ft) | * | 5434.00 | * Weir Sta Rgt (ft) | * | 708.26 | * |
| * Culv WS Out (ft) | * | 5433.00 | * Weir Submerg | * | 0.00 | * |
| Culv Nml Depth (ft) | * | 5.00 | * Weir Max Depth (ft) | * | 0.78 | * |
| Culv Crt Depth (ft) | * | 4.15 | * Weir Avg Depth (ft) | * | 0.29 | * |
| * Culv Ful Lngh (ft) | * | 29.84 | * Min Top Rd (ft) | * | 5436.55 | * |

Note - The normal depth exceeds the height of the culvert. The program assumes that the normal depth is equal to the height of the culvert.

ULVERT OUTPUT Profile #10 YR.
Culvert ID : HIGH ST - 5'

| | | | | | | | |
|---|---|---|---|---|---|---|---|
| Culv Q (cfs) | * | 179.24 | * Culv Vel In (ft/s) | * | 9.13 | * |
| * # Barrels | * | 1 | * Culv Vel Out (ft/s) | * | 11.09 | * |
| * Q Barrel (cfs) | * | 179.24 | * Culv Inv El Up (ft) | * | 5429.00 | * |
| W.S. US. (ft) | * | 5435.97 | * Culv Inv El Dn (ft) | * | 5428.85 | * |
| E.G. US. (ft) | * | 5435.99 | * Culv Frctn Ls (ft) | * | 0.74 | * |
| * Delta WS (ft) | * | 8.71 | * Culv Ext Lss (ft) | * | 6.84 | * |
| Delta EG (ft) | * | 8.23 | * Culv Ent Lss (ft) | * | 0.65 | * |
| E.G. IC (ft) | * | 5435.60 | * Q Weir (cfs) | * | | * |
| * E.G. OC (ft) | * | 5435.98 | * Weir Sta Lft (ft) | * | | * |
| * Culv WS In (ft) | * | 5434.00 | * Weir Sta Rgt (ft) | * | | * |
| Culv WS Out (ft) | * | 5432.68 | * Weir Submerg | * | | * |
| * Culv Nml Depth (ft) | * | 5.00 | * Weir Max Depth (ft) | * | | * |
| * Culv Crt Depth (ft) | * | 3.83 | * Weir Avg Depth (ft) | * | | * |
| Culv Ful Lngh (ft) | * | 3.10 | * Min Top Rd (ft) | * | 5436.55 | * |

ote - The normal depth exceeds the height of the culvert. The program assumes that the normal depth is equal to the height of the culvert.

ROSS SECTION RIVER: RED CANON DRAW
EACH: MAIN STEM RS: 10

ROSS SECTION OUTPUT Profile #100 YR.

| | | | | | | | | | | |
|---|---|---|---|---|---|---|---|---|---|---|
| * W.S. Elev (ft) | * | 5428.04 | * Element | * | Left OB | * | Channel | * | Right OB | * |
| Vel Head (ft) | * | 1.00 | * Wt. n-Val. | * | | * | 0.040 | * | | * |

| | | | | | | | | | |
|---|---|---|---|---|---|---|---|---|---|
| E.G. Elev (ft) | 5429.05 | Reach Len. (ft) | 566.42 | 566.82 | 567.37 |
| Crit W.S. (ft) | 5428.04 | Flow Area (sq ft) | | 115.24 | |
| E.G. Slope (ft/ft) | 0.019457 | Area (sq ft) | | 115.24 | |
| Q Total (cfs) | 926.00 | Flow (cfs) | | 926.00 | |
| Top Width (ft) | 58.92 | Top Width (ft) | | 58.92 | |
| Vel Total (ft/s) | 8.04 | Avg. Vel. (ft/s) | | 8.04 | |
| Max Chl Dpth (ft) | 3.44 | Hydr. Depth (ft) | | 1.96 | |
| Conv. Total (cfs) | 6638.6 | Conv. (cfs) | | 6638.6 | |
| Length Wtd. (ft) | 566.82 | Wetted Per. (ft) | | 59.68 | |
| Min Ch El (ft) | 5424.60 | Shear (lb/sq ft) | | 2.35 | |
| Alpha | 1.00 | Stream Power (lb/ft s) | | 18.85 | |
| Frctn Loss (ft) | 5.47 | Cum Volume (acre-ft) | 1.05 | 79.99 | 1.13 |
| C & E Loss (ft) | 0.21 | Cum SA (acres) | 0.29 | 15.87 | 0.30 |

rning - The energy equation could not be balanced within the specified number of iterations. The program used critical depth for the water surface and continued on with the calculations.

warning - The velocity head has changed by more than 0.5 ft (0.15 m). This may indicate the need for additional cross sections.

rning - The conveyance ratio (upstream conveyance divided by downstream conveyance) is less than 0.7 or greater than 1.4. This may indicate the need for additional cross sections.

Warning - The energy loss was greater than 1.0 ft (0.3 m). between the current and previous cross section. This may indicate the need for additional cross sections.

rning - During the standard step iterations, when the assumed water surface was set equal to critical depth, the calculated water surface came back below critical depth. This indicates that there is not a valid subcritical answer. The program defaulted to critical depth.

OSS SECTION OUTPUT Profile #50 YR.

| | | | | | | | | | |
|---|---|---|---|---|---|---|---|---|---|
| W.S. Elev (ft) | 5427.76 | Element | Left OB | Channel | Right OB |
| Vel Head (ft) | 0.87 | Wt. n-Val. | | 0.040 | |
| E.G. Elev (ft) | 5428.63 | Reach Len. (ft) | 566.42 | 566.82 | 567.37 |
| Crit W.S. (ft) | 5427.76 | Flow Area (sq ft) | | 99.02 | |
| E.G. Slope (ft/ft) | 0.019287 | Area (sq ft) | | 99.02 | |
| Q Total (cfs) | 740.00 | Flow (cfs) | | 740.00 | |
| Top Width (ft) | 56.09 | Top Width (ft) | | 56.09 | |
| Vel Total (ft/s) | 7.47 | Avg. Vel. (ft/s) | | 7.47 | |
| Max Chl Dpth (ft) | 3.16 | Hydr. Depth (ft) | | 1.77 | |
| Conv. Total (cfs) | 5328.5 | Conv. (cfs) | | 5328.5 | |
| Length Wtd. (ft) | 566.82 | Wetted Per. (ft) | | 56.79 | |
| Min Ch El (ft) | 5424.60 | Shear (lb/sq ft) | | 2.10 | |
| Alpha | 1.00 | Stream Power (lb/ft s) | | 15.69 | |
| Frctn Loss (ft) | 5.56 | Cum Volume (acre-ft) | 0.73 | 72.65 | 0.79 |
| C & E Loss (ft) | 0.18 | Cum SA (acres) | 0.24 | 15.70 | 0.26 |

rning - The energy equation could not be balanced within the specified number of iterations. The program used critical depth for the water surface and continued on with the calculations.

Warning - The velocity head has changed by more than 0.5 ft (0.15 m). This may indicate the need for additional cross sections.

rning - The conveyance ratio (upstream conveyance divided by downstream conveyance) is less than 0.7 or greater than 1.4. This may indicate the need for additional cross sections.

arning - The energy loss was greater than 1.0 ft (0.3 m). between the current and previous cross section. This may indicate the need for additional cross sections.

rning - During the standard step iterations, when the assumed water surface was set equal to critical depth, the calculated water surface came back below critical depth. This indicates that there is not a valid subcritical answer. The program defaulted to critical depth.

rning - The parabolic search method failed to converge on critical depth. The program will try the cross section slice/secant method to find critical depth.

CROSS SECTION OUTPUT  Profile #10 YR.

| | | | | | |
|---|---|---|---|---|---|
| W.S. Elev (ft) | 5427.26 | Element | Left OB | Channel | Right OB |
| Vel Head (ft) | 0.50 | Wt. n-Val. | | 0.040 | |
| E.G. Elev (ft) | 5427.76 | Reach Len. (ft) | 566.42 | 566.82 | 567.37 |
| Crit W.S. (ft) | 5427.10 | Flow Area (sq ft) | | 72.21 | |
| E.G. Slope (ft/ft) | 0.015142 | Area (sq ft) | | 72.21 | |
| Q Total (cfs) | 408.00 | Flow (cfs) | | 408.00 | |
| Top Width (ft) | 51.97 | Top Width (ft) | | 51.97 | |
| Vel Total (ft/s) | 5.65 | Avg. Vel. (ft/s) | | 5.65 | |
| Max Chl Dpth (ft) | 2.66 | Hydr. Depth (ft) | | 1.39 | |
| Conv. Total (cfs) | 3315.6 | Conv. (cfs) | | 3315.6 | |
| Length Wtd. (ft) | 566.82 | Wetted Per. (ft) | | 52.54 | |
| Min Ch El (ft) | 5424.60 | Shear (lb/sq ft) | | 1.30 | |
| Alpha | 1.00 | Stream Power (lb/ft s) | | 7.34 | |
| Frctn Loss (ft) | 10.93 | Cum Volume (acre-ft) | 0.25 | 26.32 | 0.26 |
| C & E Loss (ft) | 0.02 | Cum SA (acres) | 0.14 | 8.69 | 0.15 |

arning - The energy loss was greater than 1.0 ft (0.3 m). between the current and previous cross section. This may indicate the need for additional cross sections.

ROSS SECTION  RIVER: RED CANON DRAW
EACH: MAIN STEM  RS: 9

ROSS SECTION OUTPUT  Profile #100 YR.

| | | | | | |
|---|---|---|---|---|---|
| W.S. Elev (ft) | 5417.72 | Element | Left OB | Channel | Right OB |
| Vel Head (ft) | 0.31 | Wt. n-Val. | | 0.040 | |
| E.G. Elev (ft) | 5418.03 | Reach Len. (ft) | 795.97 | 776.33 | 829.69 |
| Crit W.S. (ft) | 5417.04 | Flow Area (sq ft) | | 206.83 | |
| E.G. Slope (ft/ft) | 0.005750 | Area (sq ft) | | 206.83 | |
| Q Total (cfs) | 926.00 | Flow (cfs) | | 926.00 | |
| Top Width (ft) | 102.44 | Top Width (ft) | | 102.44 | |
| Vel Total (ft/s) | 4.48 | Avg. Vel. (ft/s) | | 4.48 | |
| Max Chl Dpth (ft) | 2.72 | Hydr. Depth (ft) | | 2.02 | |
| Conv. Total (cfs) | 12211.5 | Conv. (cfs) | | 12211.5 | |
| Length Wtd. (ft) | 776.33 | Wetted Per. (ft) | | 103.22 | |
| Min Ch El (ft) | 5415.00 | Shear (lb/sq ft) | | 0.72 | |
| Alpha | 1.00 | Stream Power (lb/ft s) | | 3.22 | |
| Frctn Loss (ft) | 7.31 | Cum Volume (acre-ft) | 1.05 | 77.89 | 1.13 |
| C & E Loss (ft) | 0.10 | Cum SA (acres) | 0.29 | 14.82 | 0.30 |

Warning - The velocity head has changed by more than 0.5 ft (0.15 m). This may indicate the need for additional cross sections.
arning - The conveyance ratio (upstream conveyance divided by downstream conveyance) is less than 0.7 or greater than 1.4. This may indicate the need for additional cross sections.
arning - The energy loss was greater than 1.0 ft (0.3 m). between the current and previous cross section. This may indicate the need for additional cross sections.
Warning - The parabolic search method failed to converge on critical depth. The program will try the cross section slice/secant method to find critical depth.

CROSS SECTION OUTPUT  Profile #50 YR.

| | | | | | |
|---|---|---|---|---|---|
| W.S. Elev (ft) | 5417.43 | Element | Left OB | Channel | Right OB |
| Vel Head (ft) | 0.27 | Wt. n-Val. | | 0.040 | |
| E.G. Elev (ft) | 5417.70 | Reach Len. (ft) | 795.97 | 776.33 | 829.69 |
| Crit W.S. (ft) | 5416.82 | Flow Area (sq ft) | | 177.86 | |

| | | | | | | | |
|---|---|---|---|---|---|---|---|
| E.G. Slope (ft/ft) | 0.005931 | Area (sq ft) | | | 177.86 | | |
| Q Total (cfs) | 740.00 | Flow (cfs) | | | 740.00 | | |
| Top Width (ft) | 100.75 | Top Width (ft) | | | 100.75 | | |
| Vel Total (ft/s) | 4.16 | Avg. Vel. (ft/s) | | | 4.16 | | |
| Max Chl Dpth (ft) | 2.43 | Hydr. Depth (ft) | | | 1.77 | | |
| Conv. Total (cfs) | 9608.8 | Conv. (cfs) | | | 9608.8 | | |
| Length Wtd. (ft) | 776.33 | Wetted Per. (ft) | | | 101.41 | | |
| Min Ch El (ft) | 5415.00 | Shear (lb/sq ft) | | | 0.65 | | |
| Alpha | 1.00 | Stream Power (lb/ft s) | | | 2.70 | | |
| Frctn Loss (ft) | 7.56 | Cum Volume (acre-ft) | | 0.73 | 70.85 | | 0.79 |
| C & E Loss (ft) | 0.10 | Cum SA (acres) | | 0.24 | 14.68 | | 0.26 |

Warning - The velocity head has changed by more than 0.5 ft (0.15 m). This may indicate the need for additional cross sections.

Warning - The conveyance ratio (upstream conveyance divided by downstream conveyance) is less than 0.7 or greater than 1.4. This may indicate the need for additional cross sections.

Warning - The energy loss was greater than 1.0 ft (0.3 m). between the current and previous cross section. This may indicate the need for additional cross sections.

CROSS SECTION OUTPUT Profile #10 YR.

| | | | | | | |
|---|---|---|---|---|---|---|
| W.S. Elev (ft) | 5416.38 | Element | Left OB | Channel | Right OB | |
| Vel Head (ft) | 0.44 | Wt. n-Val. | | 0.040 | | |
| E.G. Elev (ft) | 5416.82 | Reach Len. (ft) | 795.97 | 776.33 | 829.69 | |
| Crit W.S. (ft) | 5416.38 | Flow Area (sq ft) | | 76.51 | | |
| E.G. Slope (ft/ft) | 0.025339 | Area (sq ft) | | 76.51 | | |
| Q Total (cfs) | 408.00 | Flow (cfs) | | 408.00 | | |
| Top Width (ft) | 89.10 | Top Width (ft) | | 89.10 | | |
| Vel Total (ft/s) | 5.33 | Avg. Vel. (ft/s) | | 5.33 | | |
| Max Chl Dpth (ft) | 1.38 | Hydr. Depth (ft) | | 0.86 | | |
| Conv. Total (cfs) | 2563.1 | Conv. (cfs) | | 2563.1 | | |
| Length Wtd. (ft) | 776.33 | Wetted Per. (ft) | | 89.35 | | |
| Min Ch El (ft) | 5415.00 | Shear (lb/sq ft) | | 1.35 | | |
| Alpha | 1.00 | Stream Power (lb/ft s) | | 7.22 | | |
| Frctn Loss (ft) | 4.52 | Cum Volume (acre-ft) | 0.25 | 25.35 | 0.26 | |
| C & E Loss (ft) | 0.06 | Cum SA (acres) | 0.14 | 7.77 | 0.15 | |

Warning - The energy equation could not be balanced within the specified number of iterations. The program used critical depth for the water surface and continued on with the calculations.

Warning - The conveyance ratio (upstream conveyance divided by downstream conveyance) is less than 0.7 or greater than 1.4. This may indicate the need for additional cross sections.

Warning - The energy loss was greater than 1.0 ft (0.3 m). between the current and previous cross section. This may indicate the need for additional cross sections.

Warning - During the standard step iterations, when the assumed water surface was set equal to critical depth, the calculated water surface came back below critical depth. This indicates that there is not a valid subcritical answer. The program defaulted to critical depth.

Warning - The parabolic search method failed to converge on critical depth. The program will try the cross section slice/secant method to find critical depth.

CROSS SECTION RIVER: RED CANON DRAW
REACH: MAIN STEM RS: 8

CROSS SECTION OUTPUT Profile #100 YR.

| | | | | | | |
|---|---|---|---|---|---|---|
| W.S. Elev (ft) | 5409.30 | Element | Left OB | Channel | Right OB | |
| Vel Head (ft) | 1.32 | Wt. n-Val. | | 0.040 | | |
| E.G. Elev (ft) | 5410.62 | Reach Len. (ft) | 563.24 | 284.34 | 77.07 | |

| | | | | | | | | | |
|---|---|---|---|---|---|---|---|---|---|
| * Crit W.S. (ft) | * | 5409.30 | * Flow Area (sq ft) | * | | * | 100.55 | * | |
| * E.G. Slope (ft/ft) | * | 0.018129 | * Area (sq ft) | * | | * | 100.55 | * | |
| Q Total (cfs) | * | 926.00 | * Flow (cfs) | * | | * | 926.00 | * | |
| Top Width (ft) | * | 38.34 | * Top Width (ft) | * | | * | 38.34 | * | |
| * Vel Total (ft/s) | * | 9.21 | * Avg. Vel. (ft/s) | * | | * | 9.21 | * | |
| Max Chl Dpth (ft) | * | 5.30 | * Hydr. Depth (ft) | * | | * | 2.62 | * | |
| Conv. Total (cfs) | * | 6877.3 | * Conv. (cfs) | * | | * | 6877.3 | * | |
| * Length Wtd. (ft) | * | 284.34 | * Wetted Per. (ft) | * | | * | 40.24 | * | |
| * Min Ch El (ft) | * | 5404.00 | * Shear (lb/sq ft) | * | | * | 2.83 | * | |
| Alpha | * | 1.00 | * Stream Power (lb/ft s) | * | | * | 26.04 | * | |
| Frctn Loss (ft) | * | 0.01 | * Cum Volume (acre-ft) | * | 1.05 | * | 75.15 | * | 1.13 * |
| * C & E Loss (ft) | * | 0.39 | * Cum SA (acres) | * | 0.29 | * | 13.56 | * | 0.30 * |

Warning - The energy equation could not be balanced within the specified number of iterations. The program used critical depth for the water surface and continued on with the calculations.

Warning - The velocity head has changed by more than 0.5 ft (0.15 m). This may indicate the need for additional cross sections.

Warning - The conveyance ratio (upstream conveyance divided by downstream conveyance) is less than 0.7 or greater than 1.4. This may indicate the need for additional cross sections.

Warning - The energy loss was greater than 1.0 ft (0.3 m). between the current and previous cross section. This may indicate the need for additional cross sections.

Warning - During the standard step iterations, when the assumed water surface was set equal to critical depth, the calculated water surface came back below critical depth. This indicates that there is not a valid subcritical answer. The program defaulted to critical depth.

CROSS SECTION OUTPUT Profile #50 YR.

| | | | | | | | | | |
|---|---|---|---|---|---|---|---|---|---|
| * W.S. Elev (ft) | * | 5408.79 | * Element | * | Left OB | * | Channel | * | Right OB * |
| Vel Head (ft) | * | 1.25 | * Wt. n-Val. | * | | * | 0.040 | * | |
| E.G. Elev (ft) | * | 5410.04 | * Reach Len. (ft) | * | 563.24 | * | 284.34 | * | 77.07 * |
| * Crit W.S. (ft) | * | 5408.79 | * Flow Area (sq ft) | * | | * | 82.32 | * | |
| E.G. Slope (ft/ft) | * | 0.018839 | * Area (sq ft) | * | | * | 82.32 | * | |
| Q Total (cfs) | * | 740.00 | * Flow (cfs) | * | | * | 740.00 | * | |
| * Top Width (ft) | * | 33.41 | * Top Width (ft) | * | | * | 33.41 | * | |
| * Vel Total (ft/s) | * | 8.99 | * Avg. Vel. (ft/s) | * | | * | 8.99 | * | |
| Max Chl Dpth (ft) | * | 4.79 | * Hydr. Depth (ft) | * | | * | 2.46 | * | |
| Conv. Total (cfs) | * | 5391.3 | * Conv. (cfs) | * | | * | 5391.3 | * | |
| * Length Wtd. (ft) | * | 284.34 | * Wetted Per. (ft) | * | | * | 35.16 | * | |
| Min Ch El (ft) | * | 5404.00 | * Shear (lb/sq ft) | * | | * | 2.75 | * | |
| Alpha | * | 1.00 | * Stream Power (lb/ft s) | * | | * | 24.75 | * | |
| * Frctn Loss (ft) | * | 0.01 | * Cum Volume (acre-ft) | * | 0.73 | * | 68.53 | * | 0.79 * |
| C & E Loss (ft) | * | 0.38 | * Cum SA (acres) | * | 0.24 | * | 13.48 | * | 0.26 * |

Warning - The energy equation could not be balanced within the specified number of iterations. The program used critical depth for the water surface and continued on with the calculations.

Warning - The velocity head has changed by more than 0.5 ft (0.15 m). This may indicate the need for additional cross sections.

Warning - The conveyance ratio (upstream conveyance divided by downstream conveyance) is less than 0.7 or greater than 1.4. This may indicate the need for additional cross sections.

Warning - The energy loss was greater than 1.0 ft (0.3 m). between the current and previous cross section. This may indicate the need for additional cross sections.

Warning - During the standard step iterations, when the assumed water surface was set equal to critical depth, the calculated water surface came back below critical depth. This indicates that there is not a valid subcritical answer. The program defaulted to critical depth.

CROSS SECTION OUTPUT Profile #10 YR.

| | | | | | | | | | |
|---|---|---|---|---|---|---|---|---|---|
| * W.S. Elev (ft) | * | 5409.64 | * Element | * | Left OB | * | Channel | * | Right OB * |

| | | | | | | | | | |
|---|---|---|---|---|---|---|---|---|---|
| Vel Head (ft) | | 0.20 | Wt. n-Val. | | | 0.040 | | | |
| E.G. Elev (ft) | | 5409.84 | Reach Len. (ft) | | 563.24 | 284.34 | | 77.07 | |
| Crit W.S. (ft) | | | Flow Area (sq ft) | | | 114.19 | | | |
| E.G. Slope (ft/ft) | | 0.002623 | Area (sq ft) | | | 114.19 | | | |
| Q Total (cfs) | | 408.00 | Flow (cfs) | | | 408.00 | | | |
| Top Width (ft) | | 42.39 | Top Width (ft) | | | 42.39 | | | |
| Vel Total (ft/s) | | 3.57 | Avg. Vel. (ft/s) | | | 3.57 | | | |
| Max Chl Dpth (ft) | | 5.64 | Hydr. Depth (ft) | | | 2.69 | | | |
| Conv. Total (cfs) | | 7966.5 | Conv. (cfs) | | | 7966.5 | | | |
| Length Wtd. (ft) | | 284.34 | Wetted Per. (ft) | | | 44.36 | | | |
| Min Ch El (ft) | | 5404.00 | Shear (lb/sq ft) | | | 0.42 | | | |
| Alpha | | 1.00 | Stream Power (lb/ft s) | | | 1.51 | | | |
| Frctn Loss (ft) | | 0.06 | Cum Volume (acre-ft) | | 0.25 | 23.65 | | 0.26 | |
| C & E Loss (ft) | | 0.06 | Cum SA (acres) | | 0.14 | 6.60 | | 0.15 | |

arning - The velocity head has changed by more than 0.5 ft (0.15 m). This may indicate the need for additional cross sections.

Warning - The conveyance ratio (upstream conveyance divided by downstream conveyance) is less than 0.7 or greater than 1.4. This may indicate the need for additional cross sections.

arning - The energy loss was greater than 1.0 ft (0.3 m). between the current and previous cross section. This may indicate the need for additional cross sections.

ROSS SECTION RIVER: RED CANON DRAW
REACH: MAIN STEM RS: 7

CROSS SECTION OUTPUT Profile #100 YR.

| | | | | | | | | | |
|---|---|---|---|---|---|---|---|---|---|
| W.S. Elev (ft) | | 5407.87 | Element | | Left OB | Channel | | Right OB | |
| Vel Head (ft) | | 0.00 | Wt. n-Val. | | | 0.040 | | | |
| E.G. Elev (ft) | | 5407.87 | Reach Len. (ft) | | 798.86 | 805.52 | | 813.65 | |
| Crit W.S. (ft) | | 5407.87 | Flow Area (sq ft) | | | 2596.68 | | | |
| E.G. Slope (ft/ft) | | 0.000013 | Area (sq ft) | | | 2596.68 | | | |
| Q Total (cfs) | | 926.00 | Flow (cfs) | | | 926.00 | | | |
| Top Width (ft) | | 580.88 | Top Width (ft) | | | 580.88 | | | |
| Vel Total (ft/s) | | 0.36 | Avg. Vel. (ft/s) | | | 0.36 | | | |
| Max Chl Dpth (ft) | | 8.87 | Hydr. Depth (ft) | | | 4.47 | | | |
| Conv. Total (cfs) | | 260806.4 | Conv. (cfs) | | | 260806.4 | | | |
| Length Wtd. (ft) | | 805.52 | Wetted Per. (ft) | | | 584.08 | | | |
| Min Ch El (ft) | | 5399.00 | Shear (lb/sq ft) | | | 0.00 | | | |
| Alpha | | 1.00 | Stream Power (lb/ft s) | | | 0.00 | | | |
| Frctn Loss (ft) | | 0.00 | Cum Volume (acre-ft) | | 1.05 | 66.35 | | 1.13 | |
| C & E Loss (ft) | | 0.00 | Cum SA (acres) | | 0.29 | 11.54 | | 0.30 | |

arning - The energy equation could not be balanced within the specified number of iterations. The program used critical depth for the water surface and continued on with the calculations.

Warning - The conveyance ratio (upstream conveyance divided by downstream conveyance) is less than 0.7 or greater than 1.4. This may indicate the need for additional cross sections.

arning - The energy loss was greater than 1.0 ft (0.3 m). between the current and previous cross section. This may indicate the need for additional cross sections.

Warning - During the standard step iterations, when the assumed water surface was set equal to critical depth, the calculated water surface came back below critical depth. This indicates that there is not a valid subcritical answer. The program defaulted to critical depth.

Warning - The parabolic search method failed to converge on critical depth. The program will try the cross section slice/secant method to find critical depth.

ote - Multiple critical depths were found at this location. The critical depth with the lowest, valid, water surface was used.

CROSS SECTION OUTPUT  Profile #50 YR.

| | | | | | |
|---|---|---|---|---|---|
| W.S. Elev (ft) | 5407.87 | Element | Left OB | Channel | Right OB |
| Vel Head (ft) | 0.00 | Wt. n-Val. | | 0.040 | |
| E.G. Elev (ft) | 5407.87 | Reach Len. (ft) | 798.86 | 805.52 | 813.65 |
| Crit W.S. (ft) | 5407.87 | Flow Area (sq ft) | | 2596.68 | |
| E.G. Slope (ft/ft) | 0.000008 | Area (sq ft) | | 2596.68 | |
| Q Total (cfs) | 740.00 | Flow (cfs) | | 740.00 | |
| Top Width (ft) | 580.88 | Top Width (ft) | | 580.88 | |
| Vel Total (ft/s) | 0.28 | Avg. Vel. (ft/s) | | 0.28 | |
| Max Chl Dpth (ft) | 8.87 | Hydr. Depth (ft) | | 4.47 | |
| Conv. Total (cfs) | 260806.4 | Conv. (cfs) | | 260806.4 | |
| Length Wtd. (ft) | 805.52 | Wetted Per. (ft) | | 584.08 | |
| Min Ch El (ft) | 5399.00 | Shear (lb/sq ft) | | 0.00 | |
| Alpha | 1.00 | Stream Power (lb/ft s) | | 0.00 | |
| Frctn Loss (ft) | 0.00 | Cum Volume (acre-ft) | 0.73 | 59.79 | 0.79 |
| C & E Loss (ft) | 0.00 | Cum SA (acres) | 0.24 | 11.48 | 0.26 |

Warning - The energy equation could not be balanced within the specified number of iterations. The program used critical depth for the water surface and continued on with the calculations.
Warning - The conveyance ratio (upstream conveyance divided by downstream conveyance) is less than 0.7 or greater than 1.4. This may indicate the need for additional cross sections.
Warning - The energy loss was greater than 1.0 ft (0.3 m). between the current and previous cross section. This may indicate the need for additional cross sections.
Warning - During the standard step iterations, when the assumed water surface was set equal to critical depth, the calculated water surface came back below critical depth. This indicates that there is not a valid subcritical answer. The program defaulted to critical depth.
Warning - The parabolic search method failed to converge on critical depth. The program will try the cross section slice/secant method to find critical depth.
Note - Multiple critical depths were found at this location. The critical depth with the lowest, valid, water surface was used.

CROSS SECTION OUTPUT  Profile #10 YR.

| | | | | | |
|---|---|---|---|---|---|
| W.S. Elev (ft) | 5407.33 | Element | Left OB | Channel | Right OB |
| Vel Head (ft) | 0.83 | Wt. n-Val. | | 0.040 | |
| E.G. Elev (ft) | 5408.16 | Reach Len. (ft) | 798.86 | 805.52 | 813.65 |
| Crit W.S. (ft) | 5407.33 | Flow Area (sq ft) | | 55.75 | |
| E.G. Slope (ft/ft) | 0.020265 | Area (sq ft) | | 55.75 | |
| Q Total (cfs) | 408.00 | Flow (cfs) | | 408.00 | |
| Top Width (ft) | 33.16 | Top Width (ft) | | 33.16 | |
| Vel Total (ft/s) | 7.32 | Avg. Vel. (ft/s) | | 7.32 | |
| Max Chl Dpth (ft) | 8.33 | Hydr. Depth (ft) | | 1.68 | |
| Conv. Total (cfs) | 2866.0 | Conv. (cfs) | | 2866.0 | |
| Length Wtd. (ft) | 805.52 | Wetted Per. (ft) | | 34.24 | |
| Min Ch El (ft) | 5399.00 | Shear (lb/sq ft) | | 2.06 | |
| Alpha | 1.00 | Stream Power (lb/ft s) | | 15.08 | |
| Frctn Loss (ft) | 0.01 | Cum Volume (acre-ft) | 0.25 | 23.09 | 0.26 |
| C & E Loss (ft) | 0.25 | Cum SA (acres) | 0.14 | 6.35 | 0.15 |

Warning - The energy equation could not be balanced within the specified number of iterations. The program used critical depth for the water surface and continued on with the calculations.
Warning - The velocity head has changed by more than 0.5 ft (0.15 m). This may indicate the need for additional cross sections.
Warning - The conveyance ratio (upstream conveyance divided by downstream conveyance) is less than 0.7 or greater than 1.4. This may indicate the need for additional cross sections.
Warning - The energy loss was greater than 1.0 ft (0.3 m). between the current and previous cross section. This may indicate the need for additional cross sections.

warning - During the standard step iterations, when the assumed water surface was set equal to critical depth, the calculated water surface came back below critical depth. This indicates that there is not a valid subcritical answer. The program defaulted to critical depth.

ote - Multiple critical depths were found at this location. The critical depth with the lowest, valid, water surface was used.

ROSS SECTION RIVER: RED CANON DRAW
REACH: MAIN STEM RS: 6

ROSS SECTION OUTPUT Profile #100 YR.

| | | | | |
|---|---|---|---|---|
| W.S. Elev (ft) | 5403.17 | Element | Left OB | Channel | Right OB |
| Vel Head (ft) | 0.00 | Wt. n-Val. | 0.060 | 0.040 | 0.060 |
| E.G. Elev (ft) | 5403.17 | Reach Len. (ft) | 100.09 | 99.55 | 99.29 |
| Crit W.S. (ft) | 5393.91 | Flow Area (sq ft) | 102.14 | 3849.34 | 107.45 |
| E.G. Slope (ft/ft) | 0.000000 | Area (sq ft) | 102.14 | 3849.34 | 107.45 |
| Q Total (cfs) | 160.00 | Flow (cfs) | 1.63 | 156.62 | 1.75 |
| Top Width (ft) | 547.49 | Top Width (ft) | 28.13 | 490.85 | 28.51 |
| Vel Total (ft/s) | 0.04 | Avg. Vel. (ft/s) | 0.02 | 0.04 | 0.02 |
| Max Chl Dpth (ft) | 11.17 | Hydr. Depth (ft) | 3.63 | 7.84 | 3.77 |
| Conv. Total (cfs) | 575957.2 | Conv. (cfs) | 5850.8 | 563796.8 | 6309.6 |
| Length Wtd. (ft) | 99.55 | Wetted Per. (ft) | 29.03 | 491.68 | 29.43 |
| Min Ch El (ft) | 5392.00 | Shear (lb/sq ft) | 0.00 | 0.00 | 0.00 |
| Alpha | 1.05 | Stream Power (lb/ft s) | 0.00 | 0.00 | 0.00 |
| Frctn Loss (ft) | | Cum Volume (acre-ft) | 0.12 | 6.75 | 0.12 |
| C & E Loss (ft) | | Cum SA (acres) | 0.03 | 1.63 | 0.03 |

ROSS SECTION OUTPUT Profile #50 YR.

| | | | | |
|---|---|---|---|---|
| W.S. Elev (ft) | 5401.98 | Element | Left OB | Channel | Right OB |
| Vel Head (ft) | 0.00 | Wt. n-Val. | 0.060 | 0.040 | 0.060 |
| E.G. Elev (ft) | 5401.98 | Reach Len. (ft) | 100.09 | 99.55 | 99.29 |
| Crit W.S. (ft) | 5393.78 | Flow Area (sq ft) | 71.17 | 3261.66 | 75.35 |
| E.G. Slope (ft/ft) | 0.000000 | Area (sq ft) | 71.17 | 3261.66 | 75.35 |
| Q Total (cfs) | 134.00 | Flow (cfs) | 1.11 | 131.71 | 1.18 |
| Top Width (ft) | 539.38 | Top Width (ft) | 23.56 | 490.85 | 24.97 |
| Vel Total (ft/s) | 0.04 | Avg. Vel. (ft/s) | 0.02 | 0.04 | 0.02 |
| Max Chl Dpth (ft) | 9.98 | Hydr. Depth (ft) | 3.02 | 6.64 | 3.02 |
| Conv. Total (cfs) | 435202.2 | Conv. (cfs) | 3607.4 | 427770.1 | 3824.7 |
| Length Wtd. (ft) | 99.55 | Wetted Per. (ft) | 24.31 | 491.68 | 25.67 |
| Min Ch El (ft) | 5392.00 | Shear (lb/sq ft) | 0.00 | 0.00 | 0.00 |
| Alpha | 1.04 | Stream Power (lb/ft s) | 0.00 | 0.00 | 0.00 |
| Frctn Loss (ft) | | Cum Volume (acre-ft) | 0.08 | 5.62 | 0.09 |
| C & E Loss (ft) | | Cum SA (acres) | 0.03 | 1.57 | 0.03 |

CROSS SECTION OUTPUT Profile #10 YR.

| | | | | |
|---|---|---|---|---|
| W.S. Elev (ft) | 5399.46 | Element | Left OB | Channel | Right OB |
| Vel Head (ft) | 0.00 | Wt. n-Val. | 0.060 | 0.040 | 0.060 |
| E.G. Elev (ft) | 5399.46 | Reach Len. (ft) | 100.09 | 99.55 | 99.29 |
| Crit W.S. (ft) | 5393.64 | Flow Area (sq ft) | 24.17 | 2025.67 | 25.01 |
| E.G. Slope (ft/ft) | 0.000000 | Area (sq ft) | 24.17 | 2025.67 | 25.01 |
| Q Total (cfs) | 110.00 | Flow (cfs) | 0.48 | 109.03 | 0.49 |
| Top Width (ft) | 519.14 | Top Width (ft) | 13.75 | 490.85 | 14.54 |
| Vel Total (ft/s) | 0.05 | Avg. Vel. (ft/s) | 0.02 | 0.05 | 0.02 |
| Max Chl Dpth (ft) | 7.46 | Hydr. Depth (ft) | 1.76 | 4.13 | 1.72 |
| Conv. Total (cfs) | 195113.7 | Conv. (cfs) | 854.2 | 193386.7 | 872.8 |

| | | | | | | | | |
|---|---|---|---|---|---|---|---|---|
| Length Wtd. (ft) | | 99.55 | Wetted Per. (ft) | | 14.18 | 491.68 | 14.95 |
| Min Ch El (ft) | | 5392.00 | Shear (lb/sq ft) | | 0.00 | 0.00 | 0.00 |
| Alpha | | 1.02 | Stream Power (lb/ft s) | | 0.00 | 0.00 | 0.00 |
| Frctn Loss (ft) | | | Cum Volume (acre-ft) | | 0.03 | 3.85 | 0.03 |
| C & E Loss (ft) | | | Cum SA (acres) | | 0.02 | 1.51 | 0.02 |

CULVERT RIVER: RED CANON DRAW
REACH: MAIN STEM RS: 5.5

CULVERT OUTPUT Profile #100 YR.
ulvert ID : BASIN CLVRT.

| | | | | | | | | |
|---|---|---|---|---|---|---|---|---|
| Culv Q (cfs) | | 144.02 | Culv Vel In (ft/s) | | 14.97 | | | |
| # Barrels | | 1 | Culv Vel Out (ft/s) | | 14.97 | | | |
| Q Barrel (cfs) | | 144.02 | Culv Inv El Up (ft) | | 5392.00 | | | |
| W.S. US. (ft) | | 5403.17 | Culv Inv El Dn (ft) | | 5388.85 | | | |
| E.G. US. (ft) | | 5403.17 | Culv Frctn Ls (ft) | | 1.51 | | | |
| Delta WS (ft) | | 6.73 | Culv Ext Lss (ft) | | 3.46 | | | |
| Delta EG (ft) | | 6.71 | Culv Ent Lss (ft) | | 1.74 | | | |
| E.G. IC (ft) | | 5403.17 | Q Weir (cfs) | | 15.98 | | | |
| E.G. OC (ft) | | 5402.94 | Weir Sta Lft (ft) | | 177.13 | | | |
| Culv WS In (ft) | | 5395.50 | Weir Sta Rgt (ft) | | 201.47 | | | |
| Culv WS Out (ft) | | 5392.35 | Weir Submerg | | 0.00 | | | |
| Culv Nml Depth (ft) | | 2.02 | Weir Max Depth (ft) | | 0.43 | | | |
| Culv Crt Depth (ft) | | 3.50 | Weir Avg Depth (ft) | | 0.39 | | | |
| Culv Ful Lngh (ft) | | 62.05 | Min Top Rd (ft) | | 5402.74 | | | |

arning - During subcritical analysis, while trying to calculate culvert and weir flow, the program could not get a balance of energy within the specified tolerance and number of trials. The program used the solution with the minimum error.
ote - Culvert critical depth exceeds the height of the culvert.
Note - During the supercritical calculations a hydraulic jump occurred inside of the culvert.
Note - The culvert inlet is submerged and the culvert flows full over part or all of its length. Therefore, the culvert inlet equations are not valid and the supercritical result has been discarded. The outlet answer will be used.

ULVERT OUTPUT Profile #50 YR.
ulvert ID : BASIN CLVRT.

| | | | | | | | | |
|---|---|---|---|---|---|---|---|---|
| Culv Q (cfs) | | 134.00 | Culv Vel In (ft/s) | | 13.93 | | | |
| # Barrels | | 1 | Culv Vel Out (ft/s) | | 21.87 | | | |
| Q Barrel (cfs) | | 134.00 | Culv Inv El Up (ft) | | 5392.00 | | | |
| W.S. US. (ft) | | 5401.98 | Culv Inv El Dn (ft) | | 5388.85 | | | |
| E.G. US. (ft) | | 5401.98 | Culv Frctn Ls (ft) | | 2.06 | | | |
| Delta WS (ft) | | 7.47 | Culv Ext Lss (ft) | | 3.87 | | | |
| Delta EG (ft) | | 7.44 | Culv Ent Lss (ft) | | 1.51 | | | |
| E.G. IC (ft) | | 5401.98 | Q Weir (cfs) | | | | | |
| E.G. OC (ft) | | 5400.13 | Weir Sta Lft (ft) | | | | | |
| Culv WS In (ft) | | 5395.50 | Weir Sta Rgt (ft) | | | | | |
| Culv WS Out (ft) | | 5390.98 | Weir Submerg | | | | | |
| Culv Nml Depth (ft) | | 1.93 | Weir Max Depth (ft) | | | | | |
| Culv Crt Depth (ft) | | 3.50 | Weir Avg Depth (ft) | | | | | |
| Culv Ful Lngh (ft) | | 62.05 | Min Top Rd (ft) | | 5402.74 | | | |

Warning - Since the culvert has supercritical flow, the program should be run in mixed flow in order to check if the cross section downstream of the culvert has supercritical flow.

Note - Culvert critical depth exceeds the height of the culvert.
Note - The flow in the culvert is entirely supercritical.

CULVERT OUTPUT Profile #10 YR.
Culvert ID : BASIN CLVRT.

| | | | |
|---|---|---|---|
| Culv Q (cfs) | 110.00 | Culv Vel In (ft/s) | 11.43 |
| # Barrels | 1 | Culv Vel Out (ft/s) | 19.67 |
| Q Barrel (cfs) | 110.00 | Culv Inv El Up (ft) | 5392.00 |
| W.S. US. (ft) | 5399.46 | Culv Inv El Dn (ft) | 5388.85 |
| E.G. US. (ft) | 5399.46 | Culv Frctn Ls (ft) | 1.61 |
| Delta WS (ft) | 6.44 | Culv Ext Lss (ft) | 3.77 |
| Delta EG (ft) | 6.40 | Culv Ent Lss (ft) | 1.01 |
| E.G. IC (ft) | 5399.46 | Q Weir (cfs) | |
| E.G. OC (ft) | 5398.53 | Weir Sta Lft (ft) | |
| Culv WS In (ft) | 5395.50 | Weir Sta Rgt (ft) | |
| Culv WS Out (ft) | 5390.82 | Weir Submerg | |
| Culv Nml Depth (ft) | 1.72 | Weir Max Depth (ft) | |
| Culv Crt Depth (ft) | 3.17 | Weir Avg Depth (ft) | |
| Culv Ful Lngh (ft) | 17.28 | Min Top Rd (ft) | 5402.74 |

Warning - Since the culvert has supercritical flow, the program should be run in mixed flow in order to check if the cross section downstream of the culvert has supercritical flow.
Note - The flow in the culvert is entirely supercritical.

CROSS SECTION RIVER: RED CANON DRAW
REACH: MAIN STEM RS: 5

CROSS SECTION OUTPUT Profile #100 YR.

| | | | | | |
|---|---|---|---|---|---|
| W.S. Elev (ft) | 5396.45 | Element | Left OB | Channel | Right OB |
| Vel Head (ft) | 0.02 | Wt. n-Val. | | 0.040 | |
| E.G. Elev (ft) | 5396.46 | Reach Len. (ft) | 355.29 | 348.49 | 357.94 |
| Crit W.S. (ft) | 5390.49 | Flow Area (sq ft) | | 158.35 | |
| E.G. Slope (ft/ft) | 0.000104 | Area (sq ft) | | 158.35 | |
| Q Total (cfs) | 160.00 | Flow (cfs) | | 160.00 | |
| Top Width (ft) | 29.62 | Top Width (ft) | | 29.62 | |
| Vel Total (ft/s) | 1.01 | Avg. Vel. (ft/s) | | 1.01 | |
| Max Chl Dpth (ft) | 7.60 | Hydr. Depth (ft) | | 5.35 | |
| Conv. Total (cfs) | 15687.3 | Conv. (cfs) | | 15687.3 | |
| Length Wtd. (ft) | 348.49 | Wetted Per. (ft) | | 36.36 | |
| Min Ch El (ft) | 5388.85 | Shear (lb/sq ft) | | 0.03 | |
| Alpha | 1.00 | Stream Power (lb/ft s) | | 0.03 | |
| Frctn Loss (ft) | | Cum Volume (acre-ft) | | 2.17 | |
| C & E Loss (ft) | | Cum SA (acres) | | 1.04 | |

CROSS SECTION OUTPUT Profile #50 YR.

| | | | | | |
|---|---|---|---|---|---|
| W.S. Elev (ft) | 5394.51 | Element | Left OB | Channel | Right OB |
| Vel Head (ft) | 0.03 | Wt. n-Val. | | 0.040 | |
| E.G. Elev (ft) | 5394.54 | Reach Len. (ft) | 355.29 | 348.49 | 357.94 |
| Crit W.S. (ft) | 5390.30 | Flow Area (sq ft) | | 104.94 | |
| E.G. Slope (ft/ft) | 0.000228 | Area (sq ft) | | 104.94 | |
| Q Total (cfs) | 134.00 | Flow (cfs) | | 134.00 | |
| Top Width (ft) | 25.47 | Top Width (ft) | | 25.47 | |
| Vel Total (ft/s) | 1.28 | Avg. Vel. (ft/s) | | 1.28 | |
| Max Chl Dpth (ft) | 5.66 | Hydr. Depth (ft) | | 4.12 | |

| | | | | | | | | | |
|---|---|---|---|---|---|---|---|---|---|
| * Conv. Total (cfs) | * | 8880.6 | * Conv. (cfs) | * | * | 8880.6 | * | * |
| * Length Wtd. (ft) | * | 348.49 | * Wetted Per. (ft) | * | * | 30.52 | * | * |
| Min Ch El (ft) | * | 5388.85 | * Shear (lb/sq ft) | * | * | 0.05 | * | * |
| Alpha | * | 1.00 | * Stream Power (lb/ft s) | * | * | 0.06 | * | * |
| * Frctn Loss (ft) | * | | * Cum Volume (acre-ft) | * | * | 1.77 | * | * |
| C & E Loss (ft) | * | | * Cum SA (acres) | * | * | 0.98 | * | * |

CROSS SECTION OUTPUT Profile #10 YR.

| | | | | | | | | | |
|---|---|---|---|---|---|---|---|---|---|
| * W.S. Elev (ft) | * | 5393.02 | * Element | * | Left OB | * | Channel | * | Right OB * |
| * Vel Head (ft) | * | 0.04 | * Wt. n-Val. | * | | * | 0.040 | * | * |
| E.G. Elev (ft) | * | 5393.06 | * Reach Len. (ft) | * | 355.29 | * | 348.49 | * | 357.94 * |
| Crit W.S. (ft) | * | 5390.12 | * Flow Area (sq ft) | * | | * | 69.61 | * | * |
| * E.G. Slope (ft/ft) | * | 0.000482 | * Area (sq ft) | * | | * | 69.61 | * | * |
| Q Total (cfs) | * | 110.00 | * Flow (cfs) | * | | * | 110.00 | * | * |
| Top Width (ft) | * | 21.94 | * Top Width (ft) | * | | * | 21.94 | * | * |
| * Vel Total (ft/s) | * | 1.58 | * Avg. Vel. (ft/s) | * | | * | 1.58 | * | * |
| * Max Chl Dpth (ft) | * | 4.17 | * Hydr. Depth (ft) | * | | * | 3.17 | * | * |
| Conv. Total (cfs) | * | 5011.9 | * Conv. (cfs) | * | | * | 5011.9 | * | * |
| Length Wtd. (ft) | * | 348.49 | * Wetted Per. (ft) | * | | * | 25.79 | * | * |
| * Min Ch El (ft) | * | 5388.85 | * Shear (lb/sq ft) | * | | * | 0.08 | * | * |
| Alpha | * | 1.00 | * Stream Power (lb/ft s) | * | | * | 0.13 | * | * |
| Frctn Loss (ft) | * | | * Cum Volume (acre-ft) | * | | * | 1.45 | * | * |
| * C & E Loss (ft) | * | | * Cum SA (acres) | * | | * | 0.92 | * | * |

CULVERT RIVER: RED CANON DRAW
REACH: MAIN STEM RS: 4.5

CULVERT OUTPUT Profile #100 YR.
Culvert ID : SOUTH STREET

| | | | | | |
|---|---|---|---|---|---|
| * Culv Q (cfs) | * | 160.00 | * Culv Vel In (ft/s) | * | 12.73 * |
| * # Barrels | * | 1 | * Culv Vel Out (ft/s) | * | 16.98 * |
| Q Barrel (cfs) | * | 160.00 | * Culv Inv El Up (ft) | * | 5387.35 * |
| W.S. US. (ft) | * | 5396.45 | * Culv Inv El Dn (ft) | * | 5386.70 * |
| * E.G. US. (ft) | * | 5396.46 | * Culv Frctn Ls (ft) | * | 1.22 * |
| Delta WS (ft) | * | 6.31 | * Culv Ext Lss (ft) | * | 3.47 * |
| Delta EG (ft) | * | 5.95 | * Culv Ent Lss (ft) | * | 1.26 * |
| * E.G. IC (ft) | * | 5396.46 | * Q Weir (cfs) | * | * |
| * E.G. OC (ft) | * | 5395.08 | * Weir Sta Lft (ft) | * | * |
| Culv WS In (ft) | * | 5391.35 | * Weir Sta Rgt (ft) | * | * |
| * Culv WS Out (ft) | * | 5389.51 | * Weir Submerg | * | * |
| * Culv Nml Depth (ft) | * | 4.00 | * Weir Max Depth (ft) | * | * |
| Culv Crt Depth (ft) | * | 3.67 | * Weir Avg Depth (ft) | * | * |
| Culv Ful Lngh (ft) | * | | * Min Top Rd (ft) | * | 5397.57 * |

Warning - Since the culvert has supercritical flow, the program should be run in mixed flow in order to check if the cross section downstream of the culvert has supercritical flow.
Note - The normal depth exceeds the height of the culvert. The program assumes that the normal depth is equal to the height of the culvert.
Note - The flow in the culvert is entirely supercritical.

CULVERT OUTPUT Profile #50 YR.
Culvert ID : SOUTH STREET

| | | | | | |
|---|---|---|---|---|---|
| * Culv Q (cfs) | * | 134.00 | * Culv Vel In (ft/s) | * | 10.66 * |

| # Barrels | 1 | Culv Vel Out (ft/s) | 14.64 |
|---|---|---|---|
| Q Barrel (cfs) | 134.00 | Culv Inv El Up (ft) | 5387.35 |
| W.S. US. (ft) | 5394.51 | Culv Inv El Dn (ft) | 5386.70 |
| E.G. US. (ft) | 5394.54 | Culv Frctn Ls (ft) | 0.89 |
| Delta WS (ft) | 4.64 | Culv Ext Lss (ft) | 2.56 |
| Delta EG (ft) | 4.33 | Culv Ent Lss (ft) | 0.88 |
| E.G. IC (ft) | 5394.54 | Q Weir (cfs) | |
| E.G. OC (ft) | 5393.95 | Weir Sta Lft (ft) | |
| Culv WS In (ft) | 5391.35 | Weir Sta Rgt (ft) | |
| Culv WS Out (ft) | 5389.43 | Weir Submerg | |
| Culv Nml Depth (ft) | 3.06 | Weir Max Depth (ft) | |
| Culv Crt Depth (ft) | 3.45 | Weir Avg Depth (ft) | |
| Culv Ful Lngh (ft) | | Min Top Rd (ft) | 5397.57 |

rning - Since the culvert has supercritical flow, the program should be run in mixed flow in order to
check if the cross section downstream of the culvert has supercritical flow.
ote - The flow in the culvert is entirely supercritical.

LVERT OUTPUT Profile #10 YR.
lvert ID : SOUTH STREET

| Culv Q (cfs) | 110.00 | Culv Vel In (ft/s) | 10.30 |
|---|---|---|---|
| # Barrels | 1 | Culv Vel Out (ft/s) | 11.87 |
| Q Barrel (cfs) | 110.00 | Culv Inv El Up (ft) | 5387.35 |
| W.S. US. (ft) | 5393.02 | Culv Inv El Dn (ft) | 5386.70 |
| E.G. US. (ft) | 5393.06 | Culv Frctn Ls (ft) | 0.51 |
| Delta WS (ft) | 3.45 | Culv Ext Lss (ft) | 1.79 |
| Delta EG (ft) | 3.20 | Culv Ent Lss (ft) | 0.89 |
| E.G. IC (ft) | 5393.06 | Q Weir (cfs) | |
| E.G. OC (ft) | 5392.99 | Weir Sta Lft (ft) | |
| Culv WS In (ft) | 5390.52 | Weir Sta Rgt (ft) | |
| Culv WS Out (ft) | 5389.46 | Weir Submerg | |
| Culv Nml Depth (ft) | 2.62 | Weir Max Depth (ft) | |
| Culv Crt Depth (ft) | 3.17 | Weir Avg Depth (ft) | |
| Culv Ful Lngh (ft) | | Min Top Rd (ft) | 5397.57 |

Warning - Since the culvert has supercritical flow, the program should be run in mixed flow in order to
check if the cross section downstream of the culvert has supercritical flow.
te - The flow in the culvert is entirely supercritical.

CROSS SECTION RIVER: RED CANON DRAW
ACH: MAIN STEM RS: 4

OSS SECTION OUTPUT Profile #100 YR.

| W.S. Elev (ft) | 5390.13 | Element | Left OB | Channel | Right OB |
|---|---|---|---|---|---|
| Vel Head (ft) | 0.38 | Wt. n-Val. | | 0.040 | |
| E.G. Elev (ft) | 5390.51 | Reach Len. (ft) | 1046.61 | 1200.51 | 1414.44 |
| Crit W.S. (ft) | | Flow Area (sq ft) | | 32.41 | |
| E.G. Slope (ft/ft) | 0.007187 | Area (sq ft) | | 32.41 | |
| Q Total (cfs) | 160.00 | Flow (cfs) | | 160.00 | |
| Top Width (ft) | 12.85 | Top Width (ft) | | 12.85 | |
| Vel Total (ft/s) | 4.94 | Avg. Vel. (ft/s) | | 4.94 | |
| Max Chl Dpth (ft) | 2.78 | Hydr. Depth (ft) | | 2.52 | |
| Conv. Total (cfs) | 1887.3 | Conv. (cfs) | | 1887.3 | |
| Length Wtd. (ft) | 1200.51 | Wetted Per. (ft) | | 16.51 | |
| Min Ch El (ft) | 5387.35 | Shear (lb/sq ft) | | 0.88 | |

| | | | | | | | | |
|---|---|---|---|---|---|---|---|---|
| * Alpha | * | 1.00 | * Stream Power (lb/ft s) | * | * | 4.35 | * | * |
| * Frctn Loss (ft) | * | 14.24 | * Cum Volume (acre-ft) | * | * | 1.41 | * | * |
| C & E Loss (ft) | * | 0.02 | * Cum SA (acres) | * | * | 0.87 | * | * |

rning - The conveyance ratio (upstream conveyance divided by downstream conveyance) is less than 0.7 or greater than 1.4. This may indicate the need for additional cross sections.
Warning - The energy loss was greater than 1.0 ft (0.3 m). between the current and previous cross section. This may indicate the need for additional cross sections.

OSS SECTION OUTPUT Profile #50 YR.

| | | | | | | | | |
|---|---|---|---|---|---|---|---|---|
| W.S. Elev (ft) | * | 5389.87 | * Element | * | Left OB | Channel | Right OB | * |
| Vel Head (ft) | * | 0.33 | * Wt. n-Val. | * | * | 0.040 | * | * |
| * E.G. Elev (ft) | * | 5390.20 | * Reach Len. (ft) | * | 1046.61 | 1200.51 | 1414.44 | * |
| Crit W.S. (ft) | * | | * Flow Area (sq ft) | * | * | 29.06 | * | * |
| E.G. Slope (ft/ft) | * | 0.006915 | * Area (sq ft) | * | * | 29.06 | * | * |
| * Q Total (cfs) | * | 134.00 | * Flow (cfs) | * | * | 134.00 | * | * |
| * Top Width (ft) | * | 12.62 | * Top Width (ft) | * | * | 12.62 | * | * |
| Vel Total (ft/s) | * | 4.61 | * Avg. Vel. (ft/s) | * | * | 4.61 | * | * |
| Max Chl Dpth (ft) | * | 2.52 | * Hydr. Depth (ft) | * | * | 2.30 | * | * |
| * Conv. Total (cfs) | * | 1611.5 | * Conv. (cfs) | * | * | 1611.5 | * | * |
| Length Wtd. (ft) | * | 1200.51 | * Wetted Per. (ft) | * | * | 15.94 | * | * |
| Min Ch El (ft) | * | 5387.35 | * Shear (lb/sq ft) | * | * | 0.79 | * | * |
| * Alpha | * | 1.00 | * Stream Power (lb/ft s) | * | * | 3.63 | * | * |
| * Frctn Loss (ft) | * | 14.12 | * Cum Volume (acre-ft) | * | * | 1.24 | * | * |
| C & E Loss (ft) | * | 0.02 | * Cum SA (acres) | * | * | 0.82 | * | * |

rning - The conveyance ratio (upstream conveyance divided by downstream conveyance) is less than 0.7 or greater than 1.4. This may indicate the need for additional cross sections.
Warning - The energy loss was greater than 1.0 ft (0.3 m). between the current and previous cross section. This may indicate the need for additional cross sections.

CROSS SECTION OUTPUT Profile #10 YR.

| | | | | | | | | |
|---|---|---|---|---|---|---|---|---|
| W.S. Elev (ft) | * | 5389.57 | * Element | * | Left OB | Channel | Right OB | * |
| Vel Head (ft) | * | 0.29 | * Wt. n-Val. | * | * | 0.040 | * | * |
| * E.G. Elev (ft) | * | 5389.86 | * Reach Len. (ft) | * | 1046.61 | 1200.51 | 1414.44 | * |
| Crit W.S. (ft) | * | | * Flow Area (sq ft) | * | * | 25.25 | * | * |
| E.G. Slope (ft/ft) | * | 0.007033 | * Area (sq ft) | * | * | 25.25 | * | * |
| * Q Total (cfs) | * | 110.00 | * Flow (cfs) | * | * | 110.00 | * | * |
| * Top Width (ft) | * | 12.36 | * Top Width (ft) | * | * | 12.36 | * | * |
| Vel Total (ft/s) | * | 4.36 | * Avg. Vel. (ft/s) | * | * | 4.36 | * | * |
| * Max Chl Dpth (ft) | * | 2.22 | * Hydr. Depth (ft) | * | * | 2.04 | * | * |
| * Conv. Total (cfs) | * | 1311.7 | * Conv. (cfs) | * | * | 1311.7 | * | * |
| Length Wtd. (ft) | * | 1200.51 | * Wetted Per. (ft) | * | * | 15.27 | * | * |
| Min Ch El (ft) | * | 5387.35 | * Shear (lb/sq ft) | * | * | 0.73 | * | * |
| * Alpha | * | 1.00 | * Stream Power (lb/ft s) | * | * | 3.16 | * | * |
| * Frctn Loss (ft) | * | 13.98 | * Cum Volume (acre-ft) | * | * | 1.08 | * | * |
| C & E Loss (ft) | * | 0.02 | * Cum SA (acres) | * | * | 0.78 | * | * |

rning - The conveyance ratio (upstream conveyance divided by downstream conveyance) is less than 0.7 or greater than 1.4. This may indicate the need for additional cross sections.
Warning - The energy loss was greater than 1.0 ft (0.3 m). between the current and previous cross section. This may indicate the need for additional cross sections.

CROSS SECTION RIVER: RED CANON DRAW
REACH: MAIN STEM RS: 3

ROSS SECTION OUTPUT  Profile #100 YR.

| | | | | | |
|---|---|---|---|---|---|
| W.S. Elev (ft) | 5375.69 | Element | Left OB | Channel | Right OB |
| Vel Head (ft) | 0.57 | Wt. n-Val. | | 0.040 | |
| E.G. Elev (ft) | 5376.26 | Reach Len. (ft) | 874.56 | 566.77 | 260.56 |
| Crit W.S. (ft) | 5375.68 | Flow Area (sq ft) | | 26.34 | |
| E.G. Slope (ft/ft) | 0.022885 | Area (sq ft) | | 26.34 | |
| Q Total (cfs) | 160.00 | Flow (cfs) | | 160.00 | |
| Top Width (ft) | 23.03 | Top Width (ft) | | 23.03 | |
| Vel Total (ft/s) | 6.08 | Avg. Vel. (ft/s) | | 6.08 | |
| Max Chl Dpth (ft) | 2.25 | Hydr. Depth (ft) | | 1.14 | |
| Conv. Total (cfs) | 1057.7 | Conv. (cfs) | | 1057.7 | |
| Length Wtd. (ft) | 566.77 | Wetted Per. (ft) | | 23.43 | |
| Min Ch El (ft) | 5373.86 | Shear (lb/sq ft) | | 1.61 | |
| Alpha | 1.00 | Stream Power (lb/ft s) | | 9.76 | |
| Frctn Loss (ft) | 8.19 | Cum Volume (acre-ft) | | 0.60 | |
| C & E Loss (ft) | 0.04 | Cum SA (acres) | | 0.37 | |

Warning - The conveyance ratio (upstream conveyance divided by downstream conveyance) is less than 0.7 or greater than 1.4. This may indicate the need for additional cross sections.

arning - The energy loss was greater than 1.0 ft (0.3 m). between the current and previous cross section. This may indicate the need for additional cross sections.

Warning - The parabolic search method failed to converge on critical depth. The program will try the cross section slice/secant method to find critical depth.

ote - Multiple critical depths were found at this location. The critical depth with the lowest, valid, water surface was used.

ROSS SECTION OUTPUT  Profile #50 YR.

| | | | | | |
|---|---|---|---|---|---|
| W.S. Elev (ft) | 5375.53 | Element | Left OB | Channel | Right OB |
| Vel Head (ft) | 0.54 | Wt. n-Val. | | 0.040 | |
| E.G. Elev (ft) | 5376.07 | Reach Len. (ft) | 874.56 | 566.77 | 260.56 |
| Crit W.S. (ft) | 5375.53 | Flow Area (sq ft) | | 22.75 | |
| E.G. Slope (ft/ft) | 0.024057 | Area (sq ft) | | 22.75 | |
| Q Total (cfs) | 134.00 | Flow (cfs) | | 134.00 | |
| Top Width (ft) | 21.65 | Top Width (ft) | | 21.65 | |
| Vel Total (ft/s) | 5.89 | Avg. Vel. (ft/s) | | 5.89 | |
| Max Chl Dpth (ft) | 2.09 | Hydr. Depth (ft) | | 1.05 | |
| Conv. Total (cfs) | 863.9 | Conv. (cfs) | | 863.9 | |
| Length Wtd. (ft) | 566.77 | Wetted Per. (ft) | | 22.00 | |
| Min Ch El (ft) | 5373.86 | Shear (lb/sq ft) | | 1.55 | |
| Alpha | 1.00 | Stream Power (lb/ft s) | | 9.15 | |
| Frctn Loss (ft) | 8.23 | Cum Volume (acre-ft) | | 0.52 | |
| C & E Loss (ft) | 0.04 | Cum SA (acres) | | 0.35 | |

rning - The energy equation could not be balanced within the specified number of iterations. The program selected the water surface that had the least amount of error between computed and assumed values.

Warning - The conveyance ratio (upstream conveyance divided by downstream conveyance) is less than 0.7 or greater than 1.4. This may indicate the need for additional cross sections.

rning - The energy loss was greater than 1.0 ft (0.3 m). between the current and previous cross section. This may indicate the need for additional cross sections.

rning - During the standard step iterations, when the assumed water surface was set equal to critical depth, the calculated water surface came back below critical depth. This indicates that there is not a valid subcritical answer. The program defaulted to critical depth.

arning - The parabolic search method failed to converge on critical depth. The program will try the

cross section slice/secant method to find critical depth.
Note - Multiple critical depths were found at this location. The critical depth with the lowest, valid,
water surface was used.

CROSS SECTION OUTPUT Profile #10 YR.

| | | | | | |
|---|---|---|---|---|---|
| W.S. Elev (ft) | 5375.40 | Element | Left OB | Channel | Right OB |
| Vel Head (ft) | 0.47 | Wt. n-Val. | | 0.040 | |
| E.G. Elev (ft) | 5375.87 | Reach Len. (ft) | 874.56 | 566.77 | 260.56 |
| Crit W.S. (ft) | 5375.38 | Flow Area (sq ft) | | 20.01 | |
| E.G. Slope (ft/ft) | 0.023142 | Area (sq ft) | | 20.01 | |
| Q Total (cfs) | 110.00 | Flow (cfs) | | 110.00 | |
| Top Width (ft) | 20.53 | Top Width (ft) | | 20.53 | |
| Vel Total (ft/s) | 5.50 | Avg. Vel. (ft/s) | | 5.50 | |
| Max Chl Dpth (ft) | 1.96 | Hydr. Depth (ft) | | 0.97 | |
| Conv. Total (cfs) | 723.1 | Conv. (cfs) | | 723.1 | |
| Length Wtd. (ft) | 566.77 | Wetted Per. (ft) | | 20.85 | |
| Min Ch El (ft) | 5373.86 | Shear (lb/sq ft) | | 1.39 | |
| Alpha | 1.00 | Stream Power (lb/ft s) | | 7.62 | |
| Frctn Loss (ft) | 8.38 | Cum Volume (acre-ft) | | 0.45 | |
| C & E Loss (ft) | 0.03 | Cum SA (acres) | | 0.33 | |

rning - The conveyance ratio (upstream conveyance divided by downstream conveyance) is less
than 0.7 or greater than 1.4. This may indicate the need for additional cross sections.
Warning - The energy loss was greater than 1.0 ft (0.3 m). between the current and previous cross
section. This may indicate the need for additional cross sections.

CROSS SECTION RIVER: RED CANON DRAW
REACH: MAIN STEM RS: 2

CROSS SECTION OUTPUT Profile #100 YR.

| | | | | | |
|---|---|---|---|---|---|
| W.S. Elev (ft) | 5367.59 | Element | Left OB | Channel | Right OB |
| Vel Head (ft) | 0.44 | Wt. n-Val. | | 0.040 | |
| E.G. Elev (ft) | 5368.03 | Reach Len. (ft) | 311.12 | 311.12 | 311.12 |
| Crit W.S. (ft) | 5367.07 | Flow Area (sq ft) | | 30.07 | |
| E.G. Slope (ft/ft) | 0.009969 | Area (sq ft) | | 30.07 | |
| Q Total (cfs) | 160.00 | Flow (cfs) | | 160.00 | |
| Top Width (ft) | 16.15 | Top Width (ft) | | 16.15 | |
| Vel Total (ft/s) | 5.32 | Avg. Vel. (ft/s) | | 5.32 | |
| Max Chl Dpth (ft) | 3.79 | Hydr. Depth (ft) | | 1.86 | |
| Conv. Total (cfs) | 1602.5 | Conv. (cfs) | | 1602.5 | |
| Length Wtd. (ft) | 311.12 | Wetted Per. (ft) | | 17.51 | |
| Min Ch El (ft) | 5364.56 | Shear (lb/sq ft) | | 1.07 | |
| Alpha | 1.00 | Stream Power (lb/ft s) | | 5.69 | |
| Frctn Loss (ft) | 2.56 | Cum Volume (acre-ft) | | 0.23 | |
| C & E Loss (ft) | 0.03 | Cum SA (acres) | | 0.12 | |

rning - The energy loss was greater than 1.0 ft (0.3 m). between the current and previous cross
section. This may indicate the need for additional cross sections.

SS SECTION OUTPUT Profile #50 YR.

| | | | | | |
|---|---|---|---|---|---|
| W.S. Elev (ft) | 5367.37 | Element | Left OB | Channel | Right OB |
| el Head (ft) | 0.39 | Wt. n-Val. | | 0.040 | |
| E.G. Elev (ft) | 5367.76 | Reach Len. (ft) | 311.12 | 311.12 | 311.12 |
| Crit W.S. (ft) | 5366.86 | Flow Area (sq ft) | | 26.62 | |

| | | | | | |
|---|---|---|---|---|---|
| * E.G. Slope (ft/ft) | * 0.009709 | * Area (sq ft) | * | * 26.62 | * |
| * Q Total (cfs) | * 134.00 | * Flow (cfs) | * | * 134.00 | * |
| * Top Width (ft) | * 15.26 | * Top Width (ft) | * | * 15.26 | * |
| * Vel Total (ft/s) | * 5.03 | * Avg. Vel. (ft/s) | * | * 5.03 | * |
| * Max Chl Dpth (ft) | * 3.57 | * Hydr. Depth (ft) | * | * 1.75 | * |
| * Conv. Total (cfs) | * 1359.9 | * Conv. (cfs) | * | * 1359.9 | * |
| * Length Wtd. (ft) | * 311.12 | * Wetted Per. (ft) | * | * 16.51 | * |
| * Min Ch El (ft) | * 5364.56 | * Shear (lb/sq ft) | * | * 0.98 | * |
| * Alpha | * 1.00 | * Stream Power (lb/ft s) | * | * 4.92 | * |
| * Frctn Loss (ft) | * 0.02 | * Cum Volume (acre-ft) | * | * 0.20 | * |
| * C & E Loss (ft) | * 0.02 | * Cum SA (acres) | * | * 0.11 | * |

Warning - The energy loss was greater than 1.0 ft (0.3 m). between the current and previous cross section. This may indicate the need for additional cross sections.

CROSS SECTION OUTPUT Profile #10 YR.

| | | | | | |
|---|---|---|---|---|---|
| * W.S. Elev (ft) | * 5367.09 | * Element | * Left OB | * Channel | * Right OB * |
| * Vel Head (ft) | * 0.37 | * Wt. n-Val. | * | * 0.040 | * * |
| * E.G. Elev (ft) | * 5367.46 | * Reach Len. (ft) | * 311.12 | * 311.12 | * 311.12 * |
| * Crit W.S. (ft) | * 5366.64 | * Flow Area (sq ft) | * | * 22.53 | * * |
| * E.G. Slope (ft/ft) | * 0.010270 | * Area (sq ft) | * | * 22.53 | * * |
| * Q Total (cfs) | * 110.00 | * Flow (cfs) | * | * 110.00 | * * |
| * Top Width (ft) | * 14.12 | * Top Width (ft) | * | * 14.12 | * * |
| * Vel Total (ft/s) | * 4.88 | * Avg. Vel. (ft/s) | * | * 4.88 | * * |
| * Max Chl Dpth (ft) | * 3.29 | * Hydr. Depth (ft) | * | * 1.59 | * * |
| * Conv. Total (cfs) | * 1085.4 | * Conv. (cfs) | * | * 1085.4 | * * |
| * Length Wtd. (ft) | * 311.12 | * Wetted Per. (ft) | * | * 15.25 | * * |
| * Min Ch El (ft) | * 5364.56 | * Shear (lb/sq ft) | * | * 0.95 | * * |
| * Alpha | * 1.00 | * Stream Power (lb/ft s) | * | * 4.62 | * * |
| * Frctn Loss (ft) | * 2.56 | * Cum Volume (acre-ft) | * | * 0.17 | * * |
| * C & E Loss (ft) | * 0.03 | * Cum SA (acres) | * | * 0.11 | * * |

Warning - The energy loss was greater than 1.0 ft (0.3 m). between the current and previous cross section. This may indicate the need for additional cross sections.

CROSS SECTION RIVER: RED CANON DRAW
REACH: MAIN STEM RS: 1

CROSS SECTION OUTPUT Profile #100 YR.

| | | | | | |
|---|---|---|---|---|---|
| * W.S. Elev (ft) | * 5365.10 | * Element | * Left OB | * Channel | * Right OB * |
| * Vel Head (ft) | * 0.33 | * Wt. n-Val. | * | * 0.040 | * * |
| * E.G. Elev (ft) | * 5365.43 | * Reach Len. (ft) | * | * | * * |
| * Crit W.S. (ft) | * 5364.35 | * Flow Area (sq ft) | * | * 34.61 | * * |
| * E.G. Slope (ft/ft) | * 0.006878 | * Area (sq ft) | * | * 34.61 | * * |
| * Q Total (cfs) | * 160.00 | * Flow (cfs) | * | * 160.00 | * * |
| * Top Width (ft) | * 17.37 | * Top Width (ft) | * | * 17.37 | * * |
| * Vel Total (ft/s) | * 4.62 | * Avg. Vel. (ft/s) | * | * 4.62 | * * |
| * Max Chl Dpth (ft) | * 3.10 | * Hydr. Depth (ft) | * | * 1.99 | * * |
| * Conv. Total (cfs) | * 1929.3 | * Conv. (cfs) | * | * 1929.3 | * * |
| * Length Wtd. (ft) | * | * Wetted Per. (ft) | * | * 18.83 | * * |
| * Min Ch El (ft) | * 5362.00 | * Shear (lb/sq ft) | * | * 0.79 | * * |
| * Alpha | * 1.00 | * Stream Power (lb/ft s) | * | * 3.65 | * * |
| * Frctn Loss (ft) | * | * Cum Volume (acre-ft) | * | * | * * |
| * C & E Loss (ft) | * | * Cum SA (acres) | * | * | * * |

Warning - The parabolic search method failed to converge on critical depth. The program will try the cross section slice/secant method to find critical depth.

CROSS SECTION OUTPUT Profile #50 YR.

| | | | | | |
|---|---|---|---|---|---|
| W.S. Elev (ft) | 5364.80 | Element | Left OB | Channel | Right OB |
| Vel Head (ft) | 0.32 | Wt. n-Val. | | 0.040 | |
| E.G. Elev (ft) | 5365.12 | Reach Len. (ft) | | | |
| Crit W.S. (ft) | 5364.12 | Flow Area (sq ft) | | 29.58 | |
| E.G. Slope (ft/ft) | 0.007375 | Area (sq ft) | | 29.58 | |
| Q Total (cfs) | 134.00 | Flow (cfs) | | 134.00 | |
| Top Width (ft) | 16.16 | Top Width (ft) | | 16.16 | |
| Vel Total (ft/s) | 4.53 | Avg. Vel. (ft/s) | | 4.53 | |
| Max Chl Dpth (ft) | 2.80 | Hydr. Depth (ft) | | 1.83 | |
| Conv. Total (cfs) | 1560.4 | Conv. (cfs) | | 1560.4 | |
| Length Wtd. (ft) | | Wetted Per. (ft) | | 17.48 | |
| Min Ch El (ft) | 5362.00 | Shear (lb/sq ft) | | 0.78 | |
| Alpha | 1.00 | Stream Power (lb/ft s) | | 3.53 | |
| Frctn Loss (ft) | | Cum Volume (acre-ft) | | | |
| C & E Loss (ft) | | Cum SA (acres) | | | |

OSS SECTION OUTPUT Profile #10 YR.

| | | | | | |
|---|---|---|---|---|---|
| W.S. Elev (ft) | 5364.60 | Element | Left OB | Channel | Right OB |
| Vel Head (ft) | 0.27 | Wt. n-Val. | | 0.040 | |
| E.G. Elev (ft) | 5364.87 | Reach Len. (ft) | | | |
| Crit W.S. (ft) | 5363.90 | Flow Area (sq ft) | | 26.43 | |
| E.G. Slope (ft/ft) | 0.006734 | Area (sq ft) | | 26.43 | |
| Q Total (cfs) | 110.00 | Flow (cfs) | | 110.00 | |
| Top Width (ft) | 15.34 | Top Width (ft) | | 15.34 | |
| Vel Total (ft/s) | 4.16 | Avg. Vel. (ft/s) | | 4.16 | |
| Max Chl Dpth (ft) | 2.60 | Hydr. Depth (ft) | | 1.72 | |
| Conv. Total (cfs) | 1340.4 | Conv. (cfs) | | 1340.4 | |
| Length Wtd. (ft) | | Wetted Per. (ft) | | 16.57 | |
| Min Ch El (ft) | 5362.00 | Shear (lb/sq ft) | | 0.67 | |
| Alpha | 1.00 | Stream Power (lb/ft s) | | 2.79 | |
| Frctn Loss (ft) | | Cum Volume (acre-ft) | | | |
| C & E Loss (ft) | | Cum SA (acres) | | | |

SUMMARY OF REACH LENGTHS

ver: RED CANON DRAW

| Reach | River Sta. | Left | Channel | Right |
|---|---|---|---|---|
| AIN STEM | 11 | 133.26 | 123.73 | 117.59 |
| MAIN STEM | 10.5 | Culvert | | |
| MAIN STEM | 10 | 566.42 | 566.82 | 567.37 |
| AIN STEM | 9 | 795.97 | 776.33 | 829.69 |
| AIN STEM | 8 | 563.24 | 284.34 | 77.07 |
| MAIN STEM | 7 | 798.86 | 805.52 | 813.65 |
| AIN STEM | 6 | 100.09 | 99.55 | 99.29 |
| AIN STEM | 5.5 | Culvert | | |
| MAIN STEM | 5 | 355.29 | 348.49 | 357.94 |
| MAIN STEM | 4.5 | Culvert | | |

| | | | | | |
|---|---|---|---|---|---|
| *MAIN STEM | * | 4 | * | 1046.61* | 1200.51* | 1414.44* |
| *MAIN STEM | * | 3 | * | 874.56* | 566.77* | 260.56* |
| MAIN STEM | * | 2 | * | 311.12* | 311.12* | 311.12* |
| MAIN STEM | * | 1 | * | 0* | 0* | 0* |

rofile Output Table - Standard Table 1

| Reach | River Sta | Q Total (cfs) | Min Ch El (ft) | W.S. Elev (ft) | Crit W.S. (ft) | E.G. Elev (ft) | E.G. Slope (ft/ft) | Vel Chnl (ft/s) | Flow Area (sq ft) | Top Width (ft) | F |
|---|---|---|---|---|---|---|---|---|---|---|---|
| MAIN STEM | 11 | 926.00 | 5429.00 | 5437.47 | 5432.30 | 5437.48 | 0.000130 | 0.76 | 1321.75 | 668.67 | |
| MAIN STEM | 11 | 740.00 | 5429.00 | 5437.31 | 5431.85 | 5437.32 | 0.000105 | 0.66 | 1215.65 | 642.25 | |
| MAIN STEM | 11 | 408.00 | 5429.00 | 5435.97 | 5430.93 | 5435.99 | 0.000633 | 0.90 | 451.35 | 465.81 | |
| MAIN STEM | 10.5 | Culvert | | | | | | | | | |
| MAIN STEM | 10 | 926.00 | 5424.60 | 5428.04 | 5428.04 | 5429.05 | 0.019457 | 8.04 | 115.24 | 58.92 | |
| MAIN STEM | 10 | 740.00 | 5424.60 | 5427.76 | 5427.76 | 5428.63 | 0.019287 | 7.47 | 99.02 | 56.09 | |
| MAIN STEM | 10 | 408.00 | 5424.60 | 5427.26 | 5427.10 | 5427.76 | 0.015142 | 5.65 | 72.21 | 51.97 | |
| MAIN STEM | 9 | 926.00 | 5415.00 | 5417.72 | 5417.04 | 5418.03 | 0.005750 | 4.48 | 206.83 | 102.44 | |
| MAIN STEM | 9 | 740.00 | 5415.00 | 5417.43 | 5416.82 | 5417.70 | 0.005931 | 4.16 | 177.86 | 100.75 | |
| MAIN STEM | 9 | 408.00 | 5415.00 | 5416.38 | 5416.38 | 5416.82 | 0.025339 | 5.33 | 76.51 | 89.10 | |
| MAIN STEM | 8 | 926.00 | 5404.00 | 5409.30 | 5409.30 | 5410.62 | 0.018129 | 9.21 | 100.55 | 38.34 | |
| MAIN STEM | 8 | 740.00 | 5404.00 | 5408.79 | 5408.79 | 5410.04 | 0.018839 | 8.99 | 82.32 | 33.41 | |
| MAIN STEM | 8 | 408.00 | 5404.00 | 5409.64 | | 5409.84 | 0.002623 | 3.57 | 114.19 | 42.39 | |
| MAIN STEM | 7 | 926.00 | 5399.00 | 5407.87 | 5407.87 | 5407.87 | 0.000013 | 0.36 | 2596.68 | 580.88 | |
| MAIN STEM | 7 | 740.00 | 5399.00 | 5407.87 | 5407.87 | 5407.87 | 0.000008 | 0.28 | 2596.68 | 580.88 | |
| MAIN STEM | 7 | 408.00 | 5399.00 | 5407.33 | 5407.33 | 5408.16 | 0.020265 | 7.32 | 55.75 | 33.16 | |
| MAIN STEM | 6 | 160.00 | 5392.00 | 5403.17 | 5393.91 | 5403.17 | 0.000000 | 0.04 | 4058.93 | 547.49 | |
| MAIN STEM | 6 | 134.00 | 5392.00 | 5401.98 | 5393.78 | 5401.98 | 0.000000 | 0.04 | 3408.18 | 539.38 | |
| MAIN STEM | 6 | 110.00 | 5392.00 | 5399.46 | 5393.64 | 5399.46 | 0.000000 | 0.05 | 2074.85 | 519.14 | |
| MAIN STEM | 5.5 | Culvert | | | | | | | | | |
| MAIN STEM | 5 | 160.00 | 5388.85 | 5396.45 | 5390.49 | 5396.46 | 0.000104 | 1.01 | 158.35 | 29.62 | |
| MAIN STEM | 5 | 134.00 | 5388.85 | 5394.51 | 5390.30 | 5394.54 | 0.000228 | 1.28 | 104.94 | 25.47 | |
| MAIN STEM | 5 | 110.00 | 5388.85 | 5393.02 | 5390.12 | 5393.06 | 0.000482 | 1.58 | 69.61 | 21.94 | |
| MAIN STEM | 4.5 | Culvert | | | | | | | | | |
| MAIN STEM | 4 | 160.00 | 5387.35 | 5390.13 | | 5390.51 | 0.007187 | 4.94 | 32.41 | 12.85 | |
| MAIN STEM | 4 | 134.00 | 5387.35 | 5389.87 | | 5390.20 | 0.006915 | 4.61 | 29.06 | 12.62 | |
| MAIN STEM | 4 | 110.00 | 5387.35 | 5389.57 | | 5389.86 | 0.007033 | 4.36 | 25.25 | 12.36 | |
| MAIN STEM | 3 | 160.00 | 5373.86 | 5375.69 | 5375.68 | 5376.26 | 0.022885 | 6.08 | 26.34 | 23.03 | |
| MAIN STEM | 3 | 134.00 | 5373.86 | 5375.53 | 5375.53 | 5376.07 | 0.024057 | 5.89 | 22.75 | 21.65 | |
| MAIN STEM | 3 | 110.00 | 5373.86 | 5375.40 | 5375.38 | 5375.87 | 0.023142 | 5.50 | 20.01 | 20.53 | |
| MAIN STEM | 2 | 160.00 | 5364.56 | 5367.59 | 5367.07 | 5368.03 | 0.009969 | 5.32 | 30.07 | 16.15 | |
| MAIN STEM | 2 | 134.00 | 5364.56 | 5367.37 | 5366.86 | 5367.76 | 0.009709 | 5.03 | 26.62 | 15.26 | |
| MAIN STEM | 2 | 110.00 | 5364.56 | 5367.09 | 5366.64 | 5367.46 | 0.010270 | 4.88 | 22.53 | 14.12 | |
| MAIN STEM | 1 | 160.00 | 5362.00 | 5365.10 | 5364.35 | 5365.43 | 0.006878 | 4.62 | 34.61 | 17.37 | |
| MAIN STEM | 1 | 134.00 | 5362.00 | 5364.80 | 5364.12 | 5365.12 | 0.007375 | 4.53 | 29.58 | 16.16 | |
| MAIN STEM | 1 | 110.00 | 5362.00 | 5364.60 | 5363.90 | 5364.87 | 0.006734 | 4.16 | 26.43 | 15.34 | |

rofile Output Table - Culvert Only

| Reach | River Sta | | E.G. US. (ft) | W.S. US. (ft) | E.G. IC (ft) | E.G. OC (ft) | Min Top Rd (ft) | Culv Q (cfs) | Q Weir (cfs) | Delta WS (ft) | Culv Vel In (ft/s) |
|---|---|---|---|---|---|---|---|---|---|---|---|
| MAIN STEM | 10.5 | HIGH ST - 6′ | 5437.48 | 5437.47 | 5437.20 | 5437.48 | 5436.55 | 292.92 | 416.51 | | 9.43 |
| MAIN STEM | 10.5 | HIGH ST - 5′ | 5437.48 | 5437.47 | 5437.05 | 5437.49 | 5436.55 | 216.56 | 416.51 | | 9.43 |
| MAIN STEM | 10.5 | HIGH ST - 6′ | 5437.32 | 5437.31 | 5437.03 | 5437.32 | 5436.55 | 286.87 | 240.48 | | 9.55 |
| MAIN STEM | 10.5 | HIGH ST - 5′ | 5437.32 | 5437.31 | 5436.89 | 5437.32 | 5436.55 | 212.65 | 240.48 | | 9.55 |
| MAIN STEM | 10.5 | HIGH ST - 6′ | 5435.99 | 5435.97 | 5435.52 | 5435.99 | 5436.55 | 228.76 | | | 8.71 |
| MAIN STEM | 10.5 | HIGH ST - 5′ | 5435.99 | 5435.97 | 5435.60 | 5435.98 | 5436.55 | 179.24 | | | 8.71 |
| MAIN STEM | 5.5 | BASIN CLVRT. | 5403.17 | 5403.17 | 5403.17 | 5402.94 | 5402.74 | 144.02 | 15.98 | | 6.73 |
| MAIN STEM | 5.5 | BASIN CLVRT. | 5401.98 | 5401.98 | 5401.98 | 5400.13 | 5402.74 | 134.00 | | | 7.47 |
| MAIN STEM | 5.5 | BASIN CLVRT. | 5399.46 | 5399.46 | 5399.46 | 5398.53 | 5402.74 | 110.00 | | | 6.44 |
| MAIN STEM | 4.5 | SOUTH STREET | 5396.46 | 5396.45 | 5396.46 | 5395.08 | 5397.57 | 160.00 | | | 6.31 |
| MAIN STEM | 4.5 | SOUTH STREET | 5394.54 | 5394.51 | 5394.54 | 5393.95 | 5397.57 | 134.00 | | | 4.64 |
| MAIN STEM | 4.5 | SOUTH STREET | 5393.06 | 5393.02 | 5393.06 | 5392.99 | 5397.57 | 110.00 | | | 3.45 |

ERRORS WARNINGS AND NOTES

rrors Warnings and Notes for Plan : AS BUILT

River: RED CANON DRAW Reach: MAIN STEM RS: 10.5 Profile: 1 Culv: HIGH ST - 6′
Note - The normal depth exceeds the height of the culvert. The program assumes that the normal depth is equal to the height of the culvert.

River: RED CANON DRAW Reach: MAIN STEM RS: 10.5 Profile: 1 Culv: HIGH ST - 5′
Note - The normal depth exceeds the height of the culvert. The program assumes that the normal depth is equal to the height of the culvert.

River: RED CANON DRAW Reach: MAIN STEM RS: 10.5 Profile: 2 Culv: HIGH ST - 6′
Note - The normal depth exceeds the height of the culvert. The program assumes that the normal depth is equal to the height of the culvert.

iver: RED CANON DRAW Reach: MAIN STEM RS: 10.5 Profile: 2 Culv: HIGH ST - 5′
Note - The normal depth exceeds the height of the culvert. The program assumes that the normal depth is equal to the height of the culvert.

iver: RED CANON DRAW Reach: MAIN STEM RS: 10.5 Profile: 3 Culv: HIGH ST - 6′
Note - The normal depth exceeds the height of the culvert. The program assumes that the normal depth is equal to the height of the culvert.

iver: RED CANON DRAW Reach: MAIN STEM RS: 10.5 Profile: 3 Culv: HIGH ST - 5′
Note - The normal depth exceeds the height of the culvert. The program assumes that the normal depth is equal to the height of the culvert.

iver: RED CANON DRAW Reach: MAIN STEM RS: 10 Profile: 1
Warning - The energy equation could not be balanced within the specified number of iterations. The program used critical depth for the water surface and continued on with the calculations.
Warning - The velocity head has changed by more than 0.5 ft (0.15 m). This may indicate the need for additional cross sections.
Warning - The conveyance ratio (upstream conveyance divided by downstream conveyance) is less than 0.7 or greater than 1.4. This may indicate the need for additional cross sections.
Warning - The energy loss was greater than 1.0 ft (0.3 m). between the current and previous cross section. This may indicate the need for additional cross sections.
Warning - During the standard step iterations, when the assumed water surface was set equal to critical depth, the calculated water surface came back below critical depth. This indicates that there is not a valid subcritical answer. The program defaulted to critical depth.

River: RED CANON DRAW Reach: MAIN STEM RS: 10 Profile: 2
Warning - The energy equation could not be balanced within the specified number of iterations. The program used critical

depth for the water surface and continued on with the calculations.

Warning - The velocity head has changed by more than 0.5 ft (0.15 m). This may indicate the need for additional cross sections.

Warning - The conveyance ratio (upstream conveyance divided by downstream conveyance) is less than 0.7 or greater than 1.4. This may indicate the need for additional cross sections.

Warning - The energy loss was greater than 1.0 ft (0.3 m). between the current and previous cross section. This may indicate the need for additional cross sections.

Warning - During the standard step iterations, when the assumed water surface was set equal to critical depth, the calculated water surface came back below critical depth. This indicates that there is not a valid subcritical answer. The program defaulted to critical depth.

Warning - The parabolic search method failed to converge on critical depth. The program will try the cross section slice/secant method to find critical depth.

ver: RED CANON DRAW Reach: MAIN STEM RS: 10 Profile: 3

Warning - The energy loss was greater than 1.0 ft (0.3 m). between the current and previous cross section. This may indicate the need for additional cross sections.

River: RED CANON DRAW Reach: MAIN STEM RS: 9 Profile: 1

Warning - The velocity head has changed by more than 0.5 ft (0.15 m). This may indicate the need for additional cross sections.

Warning - The conveyance ratio (upstream conveyance divided by downstream conveyance) is less than 0.7 or greater than 1.4. This may indicate the need for additional cross sections.

Warning - The energy loss was greater than 1.0 ft (0.3 m). between the current and previous cross section. This may indicate the need for additional cross sections.

Warning - The parabolic search method failed to converge on critical depth. The program will try the cross section slice/secant method to find critical depth.

River: RED CANON DRAW Reach: MAIN STEM RS: 9 Profile: 2

Warning - The velocity head has changed by more than 0.5 ft (0.15 m). This may indicate the need for additional cross sections.

Warning - The conveyance ratio (upstream conveyance divided by downstream conveyance) is less than 0.7 or greater than 1.4. This may indicate the need for additional cross sections.

Warning - The energy loss was greater than 1.0 ft (0.3 m). between the current and previous cross section. This may indicate the need for additional cross sections.

River: RED CANON DRAW Reach: MAIN STEM RS: 9 Profile: 3

Warning - The energy equation could not be balanced within the specified number of iterations. The program used critical depth for the water surface and continued on with the calculations.

Warning - The conveyance ratio (upstream conveyance divided by downstream conveyance) is less than 0.7 or greater than 1.4. This may indicate the need for additional cross sections.

Warning - The energy loss was greater than 1.0 ft (0.3 m). between the current and previous cross section. This may indicate the need for additional cross sections.

Warning - During the standard step iterations, when the assumed water surface was set equal to critical depth, the calculated water surface came back below critical depth. This indicates that there is not a valid subcritical answer. The program defaulted to critical depth.

Warning - The parabolic search method failed to converge on critical depth. The program will try the cross section slice/secant method to find critical depth.

ver: RED CANON DRAW Reach: MAIN STEM RS: 8 Profile: 1

Warning - The energy equation could not be balanced within the specified number of iterations. The program used critical depth for the water surface and continued on with the calculations.

Warning - The velocity head has changed by more than 0.5 ft (0.15 m). This may indicate the need for additional cross sections.

Warning - The conveyance ratio (upstream conveyance divided by downstream conveyance) is less than 0.7 or greater than 1.4. This may indicate the need for additional cross sections.

Warning - The energy loss was greater than 1.0 ft (0.3 m). between the current and previous cross section. This may indicate the need for additional cross sections.

Warning - During the standard step iterations, when the assumed water surface was set equal to critical depth, the calculated water surface came back below critical depth. This indicates that there is not a valid subcritical answer. The program defaulted to critical depth.

River: RED CANON DRAW Reach: MAIN STEM RS: 8 Profile: 2

Warning - The energy equation could not be balanced within the specified number of iterations. The program used critical depth for the water surface and continued on with the calculations.

Warning - The velocity head has changed by more than 0.5 ft (0.15 m). This may indicate the need for additional cross sections.

Warning - The conveyance ratio (upstream conveyance divided by downstream conveyance) is less than 0.7 or greater than 1.4. This may indicate the need for additional cross sections.

Warning - The energy loss was greater than 1.0 ft (0.3 m). between the current and previous cross section. This may indicate the need for additional cross sections.

Warning - During the standard step iterations, when the assumed water surface was set equal to critical depth, the calculated water surface came back below critical depth. This indicates that there is not a valid subcritical answer. The program defaulted to critical depth.

River: RED CANON DRAW Reach: MAIN STEM RS: 8 Profile: 3

Warning - The velocity head has changed by more than 0.5 ft (0.15 m). This may indicate the need for additional cross sections.

Warning - The conveyance ratio (upstream conveyance divided by downstream conveyance) is less than 0.7 or greater than 1.4. This may indicate the need for additional cross sections.

Warning - The energy loss was greater than 1.0 ft (0.3 m). between the current and previous cross section. This may indicate the need for additional cross sections.

River: RED CANON DRAW Reach: MAIN STEM RS: 7 Profile: 1

Warning - The energy equation could not be balanced within the specified number of iterations. The program used critical depth for the water surface and continued on with the calculations.

Warning - The conveyance ratio (upstream conveyance divided by downstream conveyance) is less than 0.7 or greater than 1.4. This may indicate the need for additional cross sections.

Warning - The energy loss was greater than 1.0 ft (0.3 m). between the current and previous cross section. This may indicate the need for additional cross sections.

Warning - During the standard step iterations, when the assumed water surface was set equal to critical depth, the calculated water surface came back below critical depth. This indicates that there is not a valid subcritical answer. The program defaulted to critical depth.

Warning - The parabolic search method failed to converge on critical depth. The program will try the cross section slice/secant method to find critical depth.

Note - Multiple critical depths were found at this location. The critical depth with the lowest, valid, water surface was used.

River: RED CANON DRAW Reach: MAIN STEM RS: 7 Profile: 2

Warning - The energy equation could not be balanced within the specified number of iterations. The program used critical depth for the water surface and continued on with the calculations.

Warning - The conveyance ratio (upstream conveyance divided by downstream conveyance) is less than 0.7 or greater than 1.4. This may indicate the need for additional cross sections.

Warning - The energy loss was greater than 1.0 ft (0.3 m). between the current and previous cross section. This may indicate the need for additional cross sections.

Warning - During the standard step iterations, when the assumed water surface was set equal to critical depth, the calculated water surface came back below critical depth. This indicates that there is not a valid subcritical answer. The program defaulted to critical depth.

Warning - The parabolic search method failed to converge on critical depth. The program will try the cross section slice/secant method to find critical depth.

Note - Multiple critical depths were found at this location. The critical depth with the lowest, valid, water surface was used.

River: RED CANON DRAW Reach: MAIN STEM RS: 7 Profile: 3

Warning - The energy equation could not be balanced within the specified number of iterations. The program used critical depth for the water surface and continued on with the calculations.

Warning - The velocity head has changed by more than 0.5 ft (0.15 m). This may indicate the need for additional cross sections.

Warning - The conveyance ratio (upstream conveyance divided by downstream conveyance) is less than 0.7 or greater than 1.4. This may indicate the need for additional cross sections.

Warning - The energy loss was greater than 1.0 ft (0.3 m). between the current and previous cross section. This may indicate the need for additional cross sections.

Warning - During the standard step iterations, when the assumed water surface was set equal to critical depth, the calculated water surface came back below critical depth. This indicates that there is not a valid subcritical answer. The program defaulted to critical depth.

Note - Multiple critical depths were found at this location. The critical depth with the lowest, valid, water surface was used.

River: RED CANON DRAW Reach: MAIN STEM RS: 5.5 Profile: 1

Warning - During subcritical analysis, while trying to calculate culvert and weir flow, the program could not get a balance of energy within the specified tolerance and number of trials. The program used the solution with the minimum error.

River: RED CANON DRAW  Reach: MAIN STEM  RS: 5.5  Profile: 1  Culv: BASIN CLVRT.
Note - Culvert critical depth exceeds the height of the culvert.
Note - During the supercritical calculations a hydraulic jump occurred inside of the culvert.
Note - The culvert inlet is submerged and the culvert flows full over part or all of its length. Therefore, the culvert inlet equations are not valid and the supercritical result has been discarded. The outlet answer will be used.
River: RED CANON DRAW  Reach: MAIN STEM  RS: 5.5  Profile: 2  Culv: BASIN CLVRT.
Warning - Since the culvert has supercritical flow, the program should be run in mixed flow in order to check if the cross section downstream of the culvert has supercritical flow.
Note - Culvert critical depth exceeds the height of the culvert.
Note - The flow in the culvert is entirely supercritical.
River: RED CANON DRAW  Reach: MAIN STEM  RS: 5.5  Profile: 3  Culv: BASIN CLVRT.
Warning - Since the culvert has supercritical flow, the program should be run in mixed flow in order to check if the cross section downstream of the culvert has supercritical flow.
Note - The flow in the culvert is entirely supercritical.
River: RED CANON DRAW  Reach: MAIN STEM  RS: 4.5  Profile: 1  Culv: SOUTH STREET
Warning - Since the culvert has supercritical flow, the program should be run in mixed flow in order to check if the cross section downstream of the culvert has supercritical flow.
Note - The normal depth exceeds the height of the culvert. The program assumes that the normal depth is equal to the height of the culvert.
Note - The flow in the culvert is entirely supercritical.
River: RED CANON DRAW  Reach: MAIN STEM  RS: 4.5  Profile: 2  Culv: SOUTH STREET
Warning - Since the culvert has supercritical flow, the program should be run in mixed flow in order to check if the cross section downstream of the culvert has supercritical flow.
Note - The flow in the culvert is entirely supercritical.
River: RED CANON DRAW  Reach: MAIN STEM  RS: 4.5  Profile: 3  Culv: SOUTH STREET
Warning - Since the culvert has supercritical flow, the program should be run in mixed flow in order to check if the cross section downstream of the culvert has supercritical flow.
Note - The flow in the culvert is entirely supercritical.
River: RED CANON DRAW  Reach: MAIN STEM  RS: 4  Profile: 1
Warning - The conveyance ratio (upstream conveyance divided by downstream conveyance) is less than 0.7 or greater than 1.4. This may indicate the need for additional cross sections.
Warning - The energy loss was greater than 1.0 ft (0.3 m). between the current and previous cross section. This may indicate the need for additional cross sections.
River: RED CANON DRAW  Reach: MAIN STEM  RS: 4  Profile: 2
Warning - The conveyance ratio (upstream conveyance divided by downstream conveyance) is less than 0.7 or greater than 1.4. This may indicate the need for additional cross sections.
Warning - The energy loss was greater than 1.0 ft (0.3 m). between the current and previous cross section. This may indicate the need for additional cross sections.
River: RED CANON DRAW  Reach: MAIN STEM  RS: 4  Profile: 3
Warning - The conveyance ratio (upstream conveyance divided by downstream conveyance) is less than 0.7 or greater than 1.4. This may indicate the need for additional cross sections.
Warning - The energy loss was greater than 1.0 ft (0.3 m). between the current and previous cross section. This may indicate the need for additional cross sections.
River: RED CANON DRAW  Reach: MAIN STEM  RS: 3  Profile: 1
Warning - The conveyance ratio (upstream conveyance divided by downstream conveyance) is less than 0.7 or greater than 1.4. This may indicate the need for additional cross sections.
Warning - The energy loss was greater than 1.0 ft (0.3 m). between the current and previous cross section. This may indicate the need for additional cross sections.
Warning - The parabolic search method failed to converge on critical depth. The program will try the cross section slice/secant method to find critical depth.
Note - Multiple critical depths were found at this location. The critical depth with the lowest, valid, water surface was used.
River: RED CANON DRAW  Reach: MAIN STEM  RS: 3  Profile: 2
Warning - The energy equation could not be balanced within the specified number of iterations. The program selected the water surface that had the least amount of error between computed and assumed values.
Warning - The conveyance ratio (upstream conveyance divided by downstream conveyance) is less than 0.7 or greater than 1.4. This may indicate the need for additional cross sections.
Warning - The energy loss was greater than 1.0 ft (0.3 m). between the current and previous cross section. This may indicate the need for additional cross sections.
Warning - During the standard step iterations, when the assumed water surface was set equal to critical depth, the calculated

water surface came back below critical depth. This indicates that there is not a valid subcritical answer. The program defaulted to critical depth.

Warning - The parabolic search method failed to converge on critical depth. The program will try the cross section slice/secant method to find critical depth.

Note - Multiple critical depths were found at this location. The critical depth with the lowest, valid, water surface was used.

ver: RED CANON DRAW Reach: MAIN STEM RS: 3 Profile: 3

Warning - The conveyance ratio (upstream conveyance divided by downstream conveyance) is less than 0.7 or greater than 1.4. This may indicate the need for additional cross sections.

Warning - The energy loss was greater than 1.0 ft (0.3 m). between the current and previous cross section. This may indicate the need for additional cross sections.

River: RED CANON DRAW Reach: MAIN STEM RS: 2 Profile: 1

Warning - The energy loss was greater than 1.0 ft (0.3 m). between the current and previous cross section. This may indicate the need for additional cross sections.

River: RED CANON DRAW Reach: MAIN STEM RS: 2 Profile: 2

Warning - The energy loss was greater than 1.0 ft (0.3 m). between the current and previous cross section. This may indicate the need for additional cross sections.

River: RED CANON DRAW Reach: MAIN STEM RS: 2 Profile: 3

Warning - The energy loss was greater than 1.0 ft (0.3 m). between the current and previous cross section. This may indicate the need for additional cross sections.

ver: RED CANON DRAW Reach: MAIN STEM RS: 1 Profile: 1

Warning - The parabolic search method failed to converge on critical depth. The program will try the cross section slice/secant method to find critical depth.

# SECTION 5

## As Built Profiles

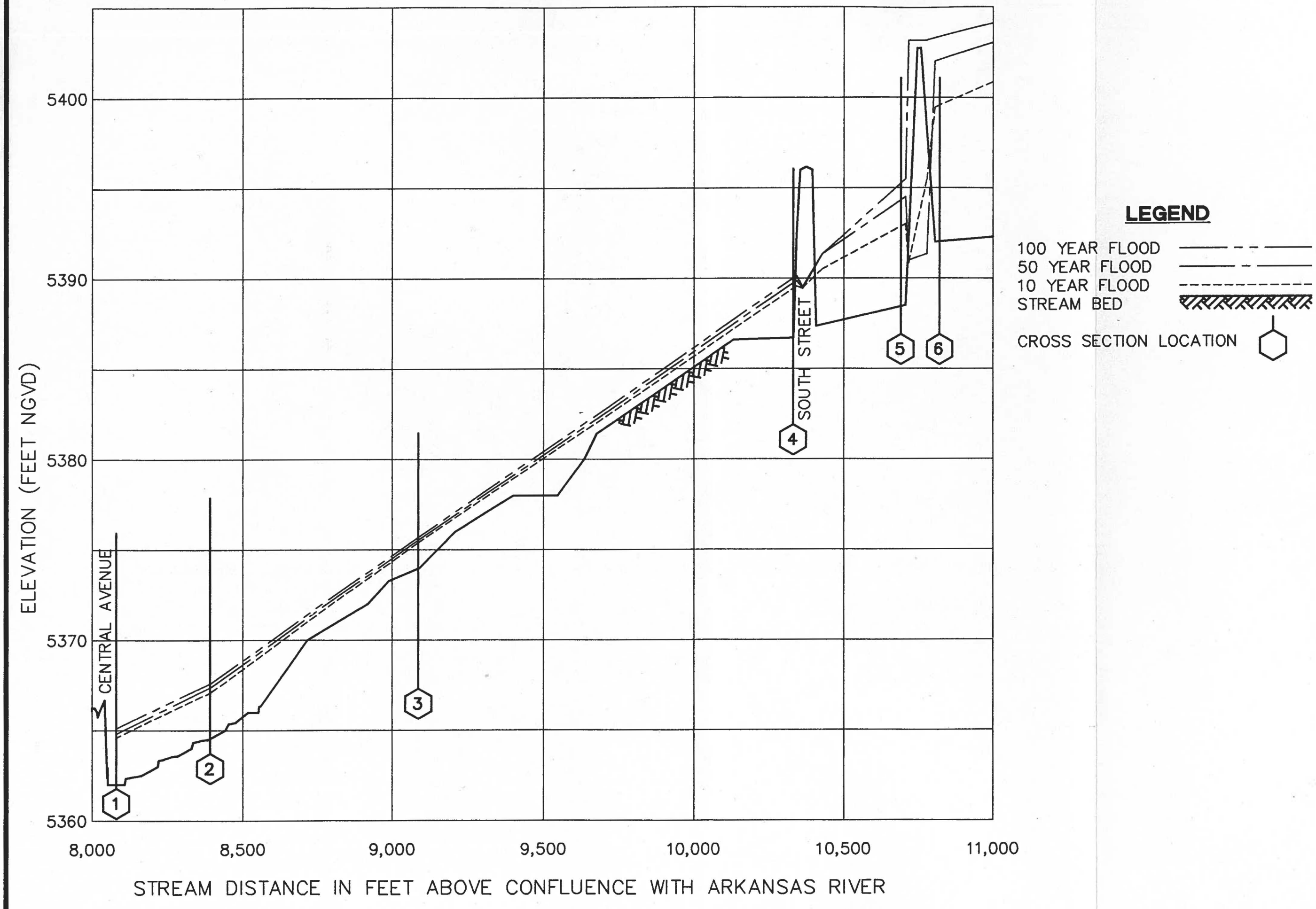


DESIGNED BY JJW
PROJECT ENGINEER MAB
PROJECT MANAGER MAB
HORZ. 300'
VERT. 5'

DATE: 3/30/98
JOB NO. 970806
CAD FILE NO. ORCH_PR1.DWG
DRAWN BY JJW

PREPARED BY:

ADP
1801 Austin Bluffs Parkway
Suite 101
Colorado Springs, CO 80918
(719) 260-0818
fax: (719) 260-8841

| NO. | DATE | REVISION | BY |
|---|---|---|---|
| | | | |

**NE CANON DRAINAGE AREA**
**SUB-BASIN FROM NE**
**CITY OF CANON CITY, COLORADO**
**FLOOD PROFILES**

FIGURE 1

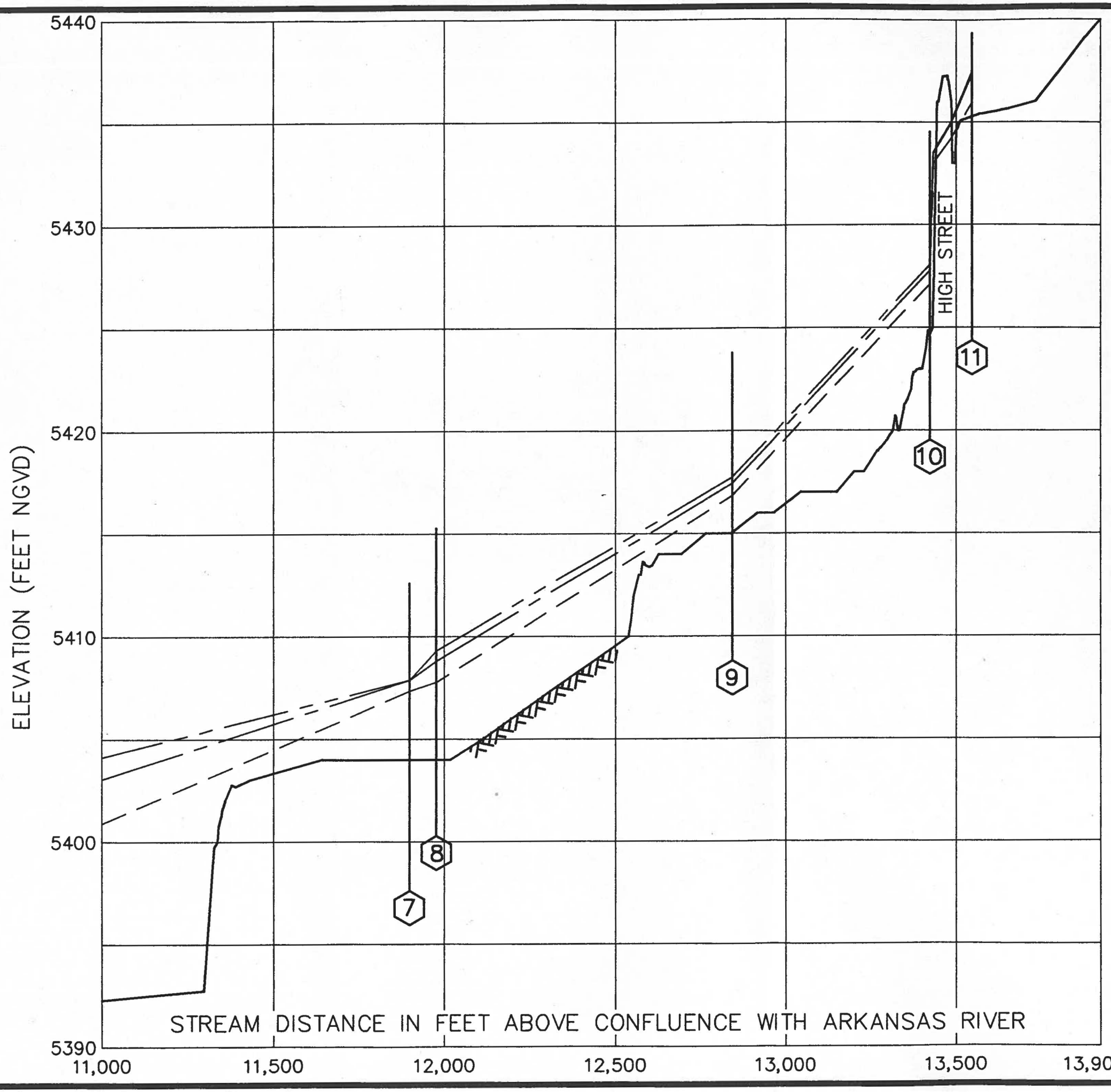


## LEGEND

100 YEAR FLOOD

50 YEAR FLOOD

10 YEAR FLOOD

STREAM BED

CROSS SECTION LOCATION

DESIGNED BY
JJW
PROJECT ENGINEER
MAB
PROJECT MANAGER
MAB
HORZ. 300'
VERT 5'

DATE:
3/30/98
JOB NO.
970806
CAD FILE NO.
ORCH_PRZ.DWG
DRAWN BY
JJW

PREPARED BY:

ADP
1861 Austin Bluffs Parkway
Suite 101
Colorado Springs, CO 80918
(719) 528-6218
fax: (719) 598-5841

| NO. | DATE | REVISION | BY |
|---|---|---|---|
| | | | |

# NE CANON DRAINAGE AREA

SUB-BASIN FROM NE

CITY OF CANON CITY, COLORADO

FLOOD PROFILE

FIGURE 2

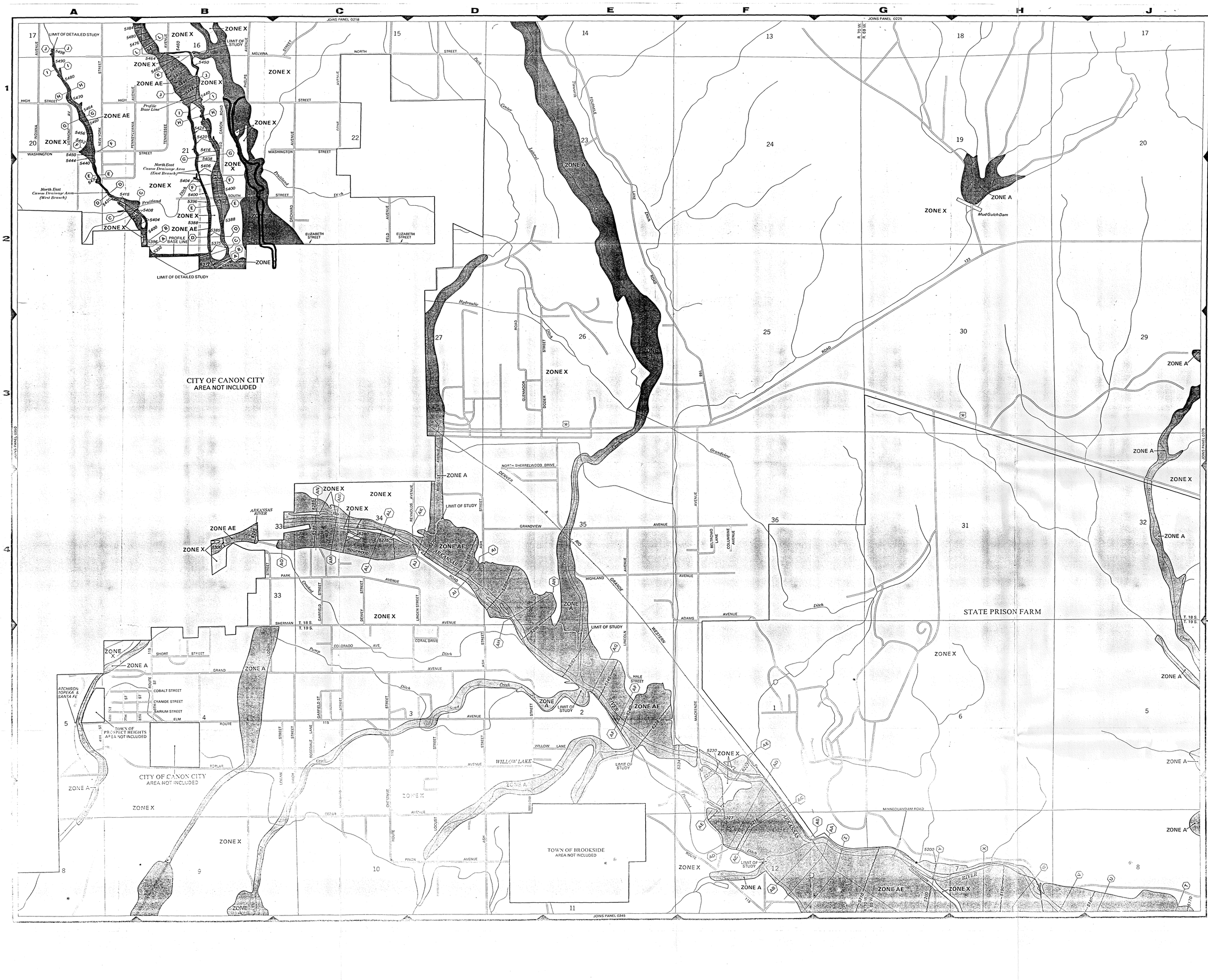


## LEGEND

SPECIAL FLOOD HAZARD AREAS INUNDATED BY 100-YEAR FLOOD

- **ZONE A** — No base flood elevations determined.
- **ZONE AE** — Base flood elevations determined.
- **ZONE AH** — Flood depths of 1 to 3 feet (usually areas of ponding); base flood elevations determined.
- **ZONE AO** — Flood depths of 1 to 3 feet (usually sheet flow on sloping terrain); average depths determined. For areas of alluvial fan flooding, velocities also determined.
- **ZONE A99** — To be protected from 100-year flood by Federal flood protection system under construction; no base elevations determined.
- **ZONE V** — Coastal flood with velocity hazard (wave action); no base flood elevations determined.
- **ZONE VE** — Coastal flood with velocity hazard (wave action); base flood elevations determined.

FLOODWAY AREAS IN ZONE AE

OTHER FLOOD AREAS

- **ZONE X** — Areas of 500-year flood; areas of 100-year flood with average depths of less than 1 foot or with drainage areas less than 1 square mile; and areas protected by levees from 100-year flood.

OTHER AREAS

- **ZONE X** — Areas determined to be outside 500-year flood plain.
- **ZONE D** — Areas in which flood hazards are undetermined.

Flood Boundary

Floodway Boundary

Zone D Boundary

Boundary Dividing Special Flood Hazard Zones, and Boundary Dividing Areas of Different Coastal Base Flood Elevations Within Special Flood Hazard Zones.

513 — Base Flood Elevation Line; Elevation in Feet*

D — D — Cross Section Line

(EL 987) — Base Flood Elevation in Feet Where Uniform Within Zone*

RM7X — Elevation Reference Mark

*Referenced to the National Geodetic Vertical Datum of 1929

## NOTES

This map is for use in administering the National Flood Insurance Program; it does not necessarily identify all areas subject to flooding, particularly from local drainage sources of small size, or all planimetric features outside Special Flood Hazard Areas.

Areas of special flood hazard (100-year flood) include Zones A, A1-30, AE, AH, AO, A99, V, V1-30 AND VE.

Certain areas not in Special Flood Hazard Areas may be protected by flood control structures.

Boundaries of the floodways were computed at cross sections and interpolated between cross sections. The floodways were based on hydraulic considerations with regard to requirements of the Federal Emergency Management Agency.

Floodway widths in some areas may be too narrow to show to scale. Floodway widths are provided in the Flood Insurance Study Report.

Coastal base flood elevations apply only landward of the shoreline.

Elevations reference marks are described in the Flood Insurance Study Report.

For adjoining map panels see separately printed Map Index

MAP REPOSITORY
Fremont County Planning Department
600 Macon Street
Canon City, Colorado 81212
(Maps available for reference only, not for distribution.)

INITIAL IDENTIFICATION:
AUGUST 16, 1974

FLOOD HAZARD BOUNDARY MAP REVISIONS:
JUNE 27, 1978

FLOOD INSURANCE RATE MAP EFFECTIVE:
SEPTEMBER 29, 1989

FLOOD INSURANCE RATE MAP REVISIONS:

Refer to the FLOOD INSURANCE RATE MAP EFFECTIVE DATE shown on this map to determine when actuarial rates apply to structures in the zones where elevations or depths have been established.

To determine if flood insurance is available, contact an insurance agent or call the National Flood Insurance Program at (800) 638-6620.

APPROXIMATE SCALE IN FEET
1000 0 1000

NATIONAL FLOOD INSURANCE PROGRAM

# FIRM
## FLOOD INSURANCE RATE MAP

FREMONT COUNTY, COLORADO
(UNINCORPORATED AREAS)

PANEL 335 OF 500
(SEE MAP INDEX FOR PANELS NOT PRINTED)

PANEL LOCATION

COMMUNITY-PANEL NUMBER
080067 0335 B

EFFECTIVE DATE:
SEPTEMBER 29, 1989

Federal Emergency Management Agency